Corner Computer Desk • Tool Chest • Knife Rack • Installing a Full Mortise Lock

Woodsmith®

WhereWeShare.com

Vol. 19 / No. 109

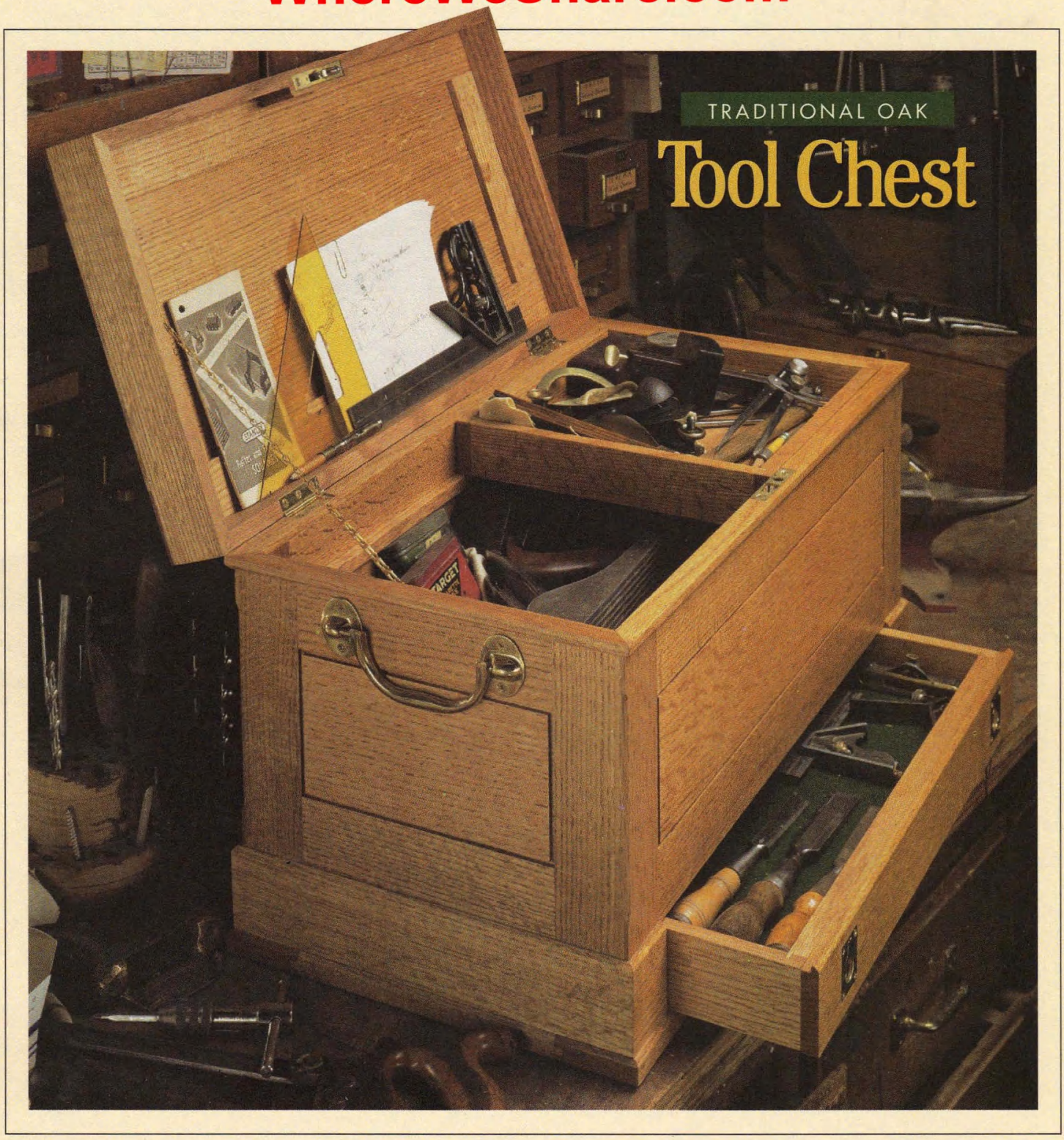

Woodsmith

No. 109 February, 1997

Publisher Donald B. Peschke
Editor Terry J. Strohman
Associate Editor Jon Garbison
Assistant Editor Vincent Ancona
Art Director Todd Lambirth
Senior Illustrators David Kreyling, Dirk Ver Steeg
Graphic Designer Mike Mittermeier

CREATIVE RESOURCES

Creative Director: Ted Kralicek • *Project Developer:* Ken Munkel • *Project Designer:* Ted Wong, Jr. • *Shop Manager:* Steve Curtis • *Shop Craftsman:* Steve Johnson • *Photography Dir.:* Lark Smothermon • *Senior Photographer:* Crayola England

BOOKS

Executive Editor: Douglas L. Hicks • *Art Director:* Linda Vermie • *Senior Graphic Designer:* Chris Glowacki

CIRCULATION

Circulation Director: Susan Du Bois • *Direct Mail Manager:* Glenda K. Battles • *Subscription Manager:* Sandy Baum • *Renewal Manager:* Paige Rogers • *Assistant Direct Mail Mgr.:* Julie Greenlee • *Assistant Subscription Mgr.:* Joy Krause • *Associate Graphic Design Director:* Susie Rider • *Sr. Graphic Designer:* Cheryl L. Simpson

CORPORATE SERVICES

Vice President of Planning and Finance: Jon Macarthy • *Controller:* Robin Hutchinson • *Sr. Account.:* Laura Thomas • *Accts. Payable:* Mary J. Schultz • *Production Dir.:* George Chmielarz • *Production Assistant:* Susan Dickman • *Electronic Pub:* Douglas M. Lidster • *Production Artist:* Jon Snyder • *Prepress Image Spec.:* Troy A. Clark • *New Media Manager:* Gordon C. Gaippe • *Network Administator:* Al Barnes • *Prof. Development Dir.:* Joyce Moore • *H.R. Assistant:* Kirsten Koele • *Admin. Assistant:* Julia Fish • *Receptionists:* Jeanne Johnson, Sheryl Ribbey • *Building Maint.:* Ken Griffith

WOODSMITH MAIL ORDER

Operations Director: Bob Baker • *Art Dir.:* Cindy Scarpino • *Materials Manager:* Mark Mattiussi • *Customer Service Mgr.:* Jennie Enos • *Nat. Sales Manager:* Kent A. Buckton • *Warehouse Supr.:* Nancy Johnson • *Buyer:* Linda Jones • *Technical Service Rep.:* Matt TeRonde • *Operation Assistant:* Tammy Aldini • *Team Leader:* Karla Eslinger • *Promotion Copywriter:* Dave Stone • *Cust. Serv. Reps.:* Anna Cox, Margo Petrus, Tammy Truckenbrod, Billy Nelson, Nancy Downey • *Warehouse:* Chuck Carlson, Sylvia Carey, Larry Prine, Scott Gilliam,

WOODSMITH STORE

Manager: Dave Larson • *Assistant Manager:* Paul Schneider • *Sales Staff:* Pat Lowry, Jerome Herr, Wendell Stone, Jim Barnett • *Office Manager:* Vicki Edwards

Woodsmith® (ISSN 0164-4114) is published bimonthly (Feb., Apr., June, Aug., Oct., Dec.) by August Home Publishing Company, 2200 Grand, Des Moines, IA 50312.

Woodsmith® is a registered trademark of August Home Publishing.
Copyright© 1997 August Home Publishing Company. All rights reserved.

Subscriptions: Single copy: $4.99. One year subscription (6 issues), $24.95. (Canada/Foreign add $5 per year, U.S. funds.)
Periodicals Postage Paid at Des Moines, IA and at additional offices.
Postmaster: Send change of address to *Woodsmith*, Box 37112, Boone, IA 50037-2112.
Subscription Questions? Write to *Woodsmith*, P.O. Box 842, Des Moines IA 50304-9961 or call 1-800-333-5075, 8:00 am to 5:00 pm, Central Time, weekdays.
E-Mail: woodsmith@woodsmith.com
World Wide Web: http://www.woodsmith.com

EDITOR'S COLUMN

SAWDUST

I really enjoy nosing around the shops of other woodworkers. Especially when they're filled with *lots* of old tools and hardware. I guess that's one of the reasons I enjoy visiting Adolph Peschke's shop. (That's him in his shop in the photo at right.) The other reason is it's a great way to come up with new ideas or to revisit old ones.

That's exactly what happened the other day as I was poking around in Adolph's shop. I came across an old tool chest. It was constructed of solid wood panels and had been built by a carpenter to carry his tools. Nothing fancy really, just a sturdy chest designed to be used on a daily basis.

That tool chest got me thinking about building one of my own.

TOOL CHEST. The tool chest shown on page 20 incorporates several traditional features: Frame and panel construction, a lift-out sliding tray, and plenty of storage space for tools.

But we also added some things that make it unique. First, there's a drawer built into the base of the chest. This provides a handy place to store chisels or other tools that could be easily damaged.

Second, we installed a special type of full-mortise lock that has a pin in it to help keep the lid aligned. If you'd like to learn more about installing a full-mortise lock, the step-by-step article begins on page 28.

Finally, we "dressed up" the chest by adding heavy-duty brass handles and some flush ring drawer pulls.

By the way, if the name Peschke sounds familiar, it's because Aldoph's son (Don) started *Woodsmith* nineteen years ago. And the old tool chest I was telling you about — it belonged to Don's grandfather.

But that's enough about the tool chest. There's also another interesting project in this issue.

CORNER COMPUTER DESK. When we designed the computer desk (on page 6) we wanted one that would meet the needs of a computer user — not a traditional writing desk. So we designed it to fit in a corner. This way you can have a deep top for a monitor without taking up too much floor space. And there's a pull-out tray for the keyboard.

Finally, we used a modular design that allows you to expand the desk to suit your needs.

Terry

A LOOK INSIDE

CONTENTS

Features

Corner Computer Desk 6

Whether you're applying plastic laminate, attaching hardwood edging, or installing knock-down hardware, building this elegant desk allows you to try a variety of woodworking techniques.

Desk Extension Wing 14

Need more desk space? Build one (or two) matching extension wings to go along with the corner computer desk. The modular design allows you to add a wing at any time.

Tool Chest 20

This traditional chest is designed to hold your favorite hand tools and last a long time. It features frame and panel joinery, a large storage drawer in the base, and solid brass hardware.

Full Mortise Lock 28

There's no mystery to installing a full-mortise lock. All it takes is a little patience, careful layout, and our step-by-step instructions.

Knife Rack 30

Designed to be built in a weekend, this knife rack is a practical way to store your knives. And it can be used in two different ways: hung on a wall or placed flat in a drawer.

Departments

Tips & Techniques 4
Shop Notes 18
Talking Shop 33
Reader's Jig 34
Sources 35

Corner Computer Desk page 6

Tool Chest page 20

Full Mortise Lock page 28

Knife Rack page 30

TIPS & TECHNIQUES

Board Support

In the past, I've used a stand to support the ends of long boards that were clamped up in my vise. But the stand got in the way, and it was a hassle to drag it out every time I needed to use it.

To solve this problem, I made a board support out of a scrap piece of 2x4, see Fig. 1. Then I attached it to the leg of my workbench with a butt hinge.

Now, when I need to clamp up a long board, I just swing out the board support. When I'm done, it just folds back under my bench.

Kevin Hemmingsen
Wabasha, Minnesota

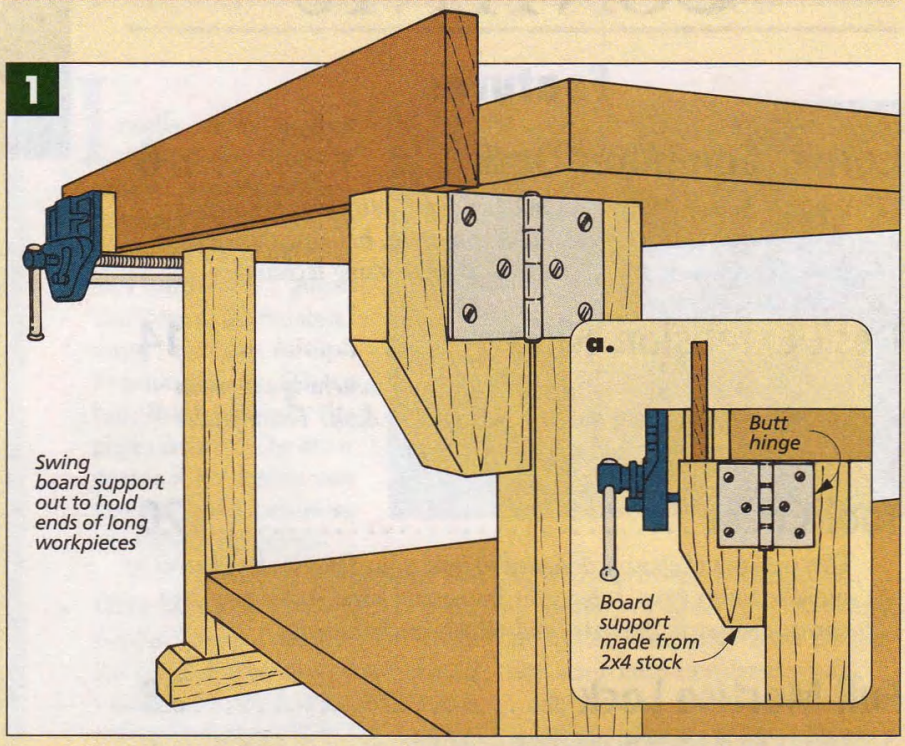

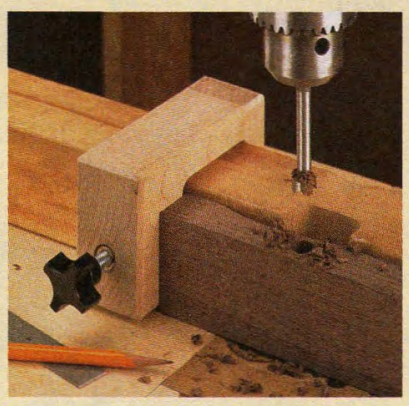

Piston Stop Block

I made a fence for my drill press, and it worked great. But to improve the fence even more, I made a stop block with a "piston" that tightens against the fence.

My block is made out of two pieces of wood, one of which is cut away to create an "L" shape, see drawing.

The "piston" is a short piece of 3/4"-dia. dowel that fits into a counterbore drilled in the stop block.

To tighten and loosen the piston, I installed a threaded insert into the block. Then I added a small knob with a 5/16"-dia. threaded stud.

Stu Klausner
Ithaca, New York

Screw Eye Tool

Inserting screw eyes into a project can be hard on your fingers. So I made a screw eye "driver" to do the job.

It's just a piece of dowel with a slot cut in one end to fit snugly over the screw eye. Then slip a piece of rubber or plastic tubing over the end to hold the screw eye in place.

Gerald Frahm
Stratford, Wisconsin

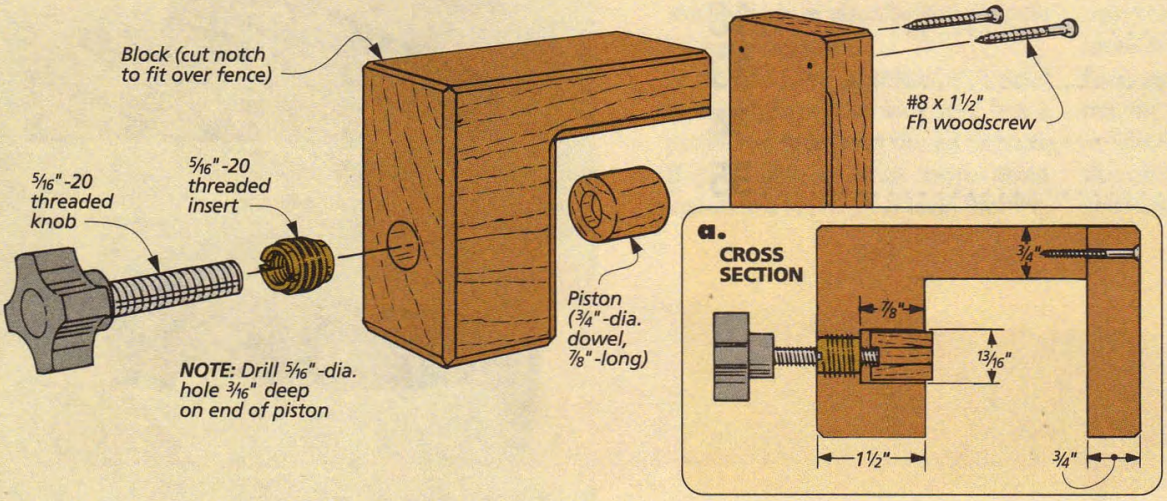

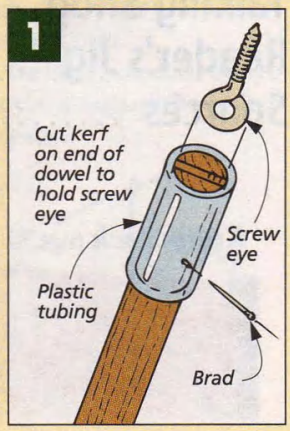

Pull-Out Planer Shelf

Since I have a small shop, I store my benchtop planer on a shelf below my bench. But I got tired of having to lift the planer up onto my bench top whenever I wanted to use it. So I built a pull-out shelf that fits under my bench.

The shelf is nothing more than a piece of plywood mounted on a pair of full-extension drawer glides. (Make sure to use glides that can support the weight of your planer.)

The drawer glides are mounted to a couple of cleats that are screwed down to the existing bench shelf, see Fig. 1.

To give the shelf extra support when it's extended, I added a support frame to the end. I built the support frame out of 2x4 lumber, see detail 'a'. (You will need to size the frame to fit your bench and planer.) A couple of casters mounted on the bottom of the frame make it easier to roll the shelf out from under the bench.

To finish the shelf, I added a handle to the front of the support frame.

Now all I have to do is pull the planer out from under my bench when I want to use it. Then roll it back out of the way when I'm finished with it.

Richard Cacioppo
Middle Village, New York

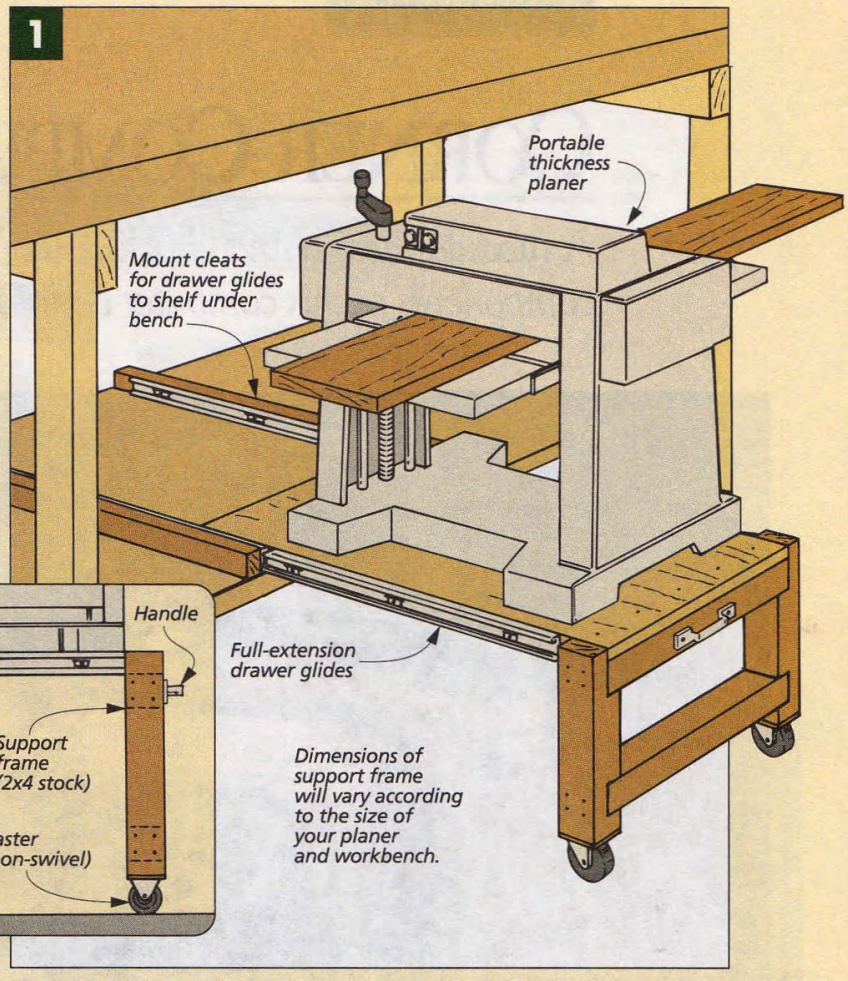

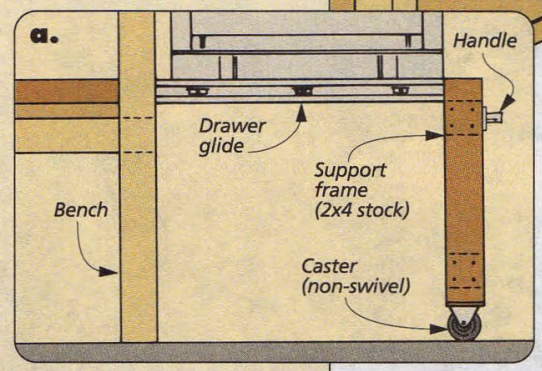

Quick Tips

AIR GUN PLUGS

Dust and dirt can cause the seals of air-powered tools to wear out quickly. To protect my brad and nail guns from sawdust and debris when they're not being used, I simply plug the air inlet holes with golf tees.

David Beegle
Lomina Beach, CA

SAW-CLEANING PAIL

I used to clean my saw blades in an old pizza pan. But the cleaning solvent always sloshed over the sides.

Now I use a plastic five-gallon pail. (The kind that drywall joint compound comes in.)

The high walls of the pail keep the solvent from spilling out. And the lid prevents evaporation so I can save the cleaning solvent and use it over again.

Christopher Aman
Rochester, New York

Bench Dogs

I built my workbench with ¾"-dia. holes for round bench dogs. But instead of buying bench dogs, I made mine out of short lengths of ¾"-dia. dowel stock.

To give the bench dogs a better grip and prevent them from falling through the dog holes, I added a rubber "crutch tip" to the end of each dog. (Crutch tips can be purchased at most hardware stores.)

Bob Holm
Saratoga Springs, New York

SUBMIT YOUR TIPS

If you would like to share an *original* shop-tested tip, send it to: *Woodsmith*, Tips and Techniques, 2200 Grand Avenue, Des Moines, Iowa 50312. Or if it's easier, FAX it to us at: 515-282-6741. Or use our E-Mail: 75330.2301@compuserve.com.

If published, you'll receive $30 to $150, depending on the published length. Include a brief explanation and sketch or photo. And don't worry, we'll rewrite the tip and redraw the art, if necessary. Also, *please* include a daytime phone number.

FEATURE PROJECT

CORNER COMPUTER DESK

A modular design and knock-down hardware allow you to tailor the components of this computer desk to suit your needs.

Somehow, a computer sitting on a traditional writing desk has always seemed a bit out of place to me. Maybe it's the contrast between old and new. But I think it also has something to do with size and proportion. Most writing desks are just too small and shallow for a computer and all the equipment that goes along with it.

So when designing this computer desk, we wanted it to be large enough for a computer. But we didn't want to make it so big that it took over the whole room. The answer came in two parts. First, we designed the desk to fit in a corner. This allows you to make the desk deep enough for a computer. But since it sits in a corner, it won't take up much more space than an ordinary writing desk. (Of course, the desk can also be placed in the center of a larger room, see photo on back cover.)

MODULAR DESIGN. The second thing we did was design the desk to be modular. You can build just the basic corner unit, see drawing on opposite page. Or if you need more space, you can expand the desk by adding an extension wing (or two). And because the extension wings can be added to either end of the desk, you can configure it to conform to your own size and space requirements.

MODERN MATERIALS. To go along with the modern design of the computer desk, we used some modern materials as well. Like plastic laminate and MDF (medium-density fiberboard) for the top. And instead of traditional woodworking joinery methods, we used knock-down hardware to assemble most of the components of the desk.

DESIGN OPTIONS. We used black plastic laminate, cherry, and cherry plywood to build our desk. The contrast between the warm look of the cherry and the black laminate gives the desk a classy and formal appearance. For a different look, try changing the combination of wood and laminate. By choosing a different type of wood and a different color of laminate, the desk can be tailored to blend in with its surroundings, see box on opposite page.

Construction Details

OVERALL DIMENSIONS:
52¾"W x 52¾"D x 30"H

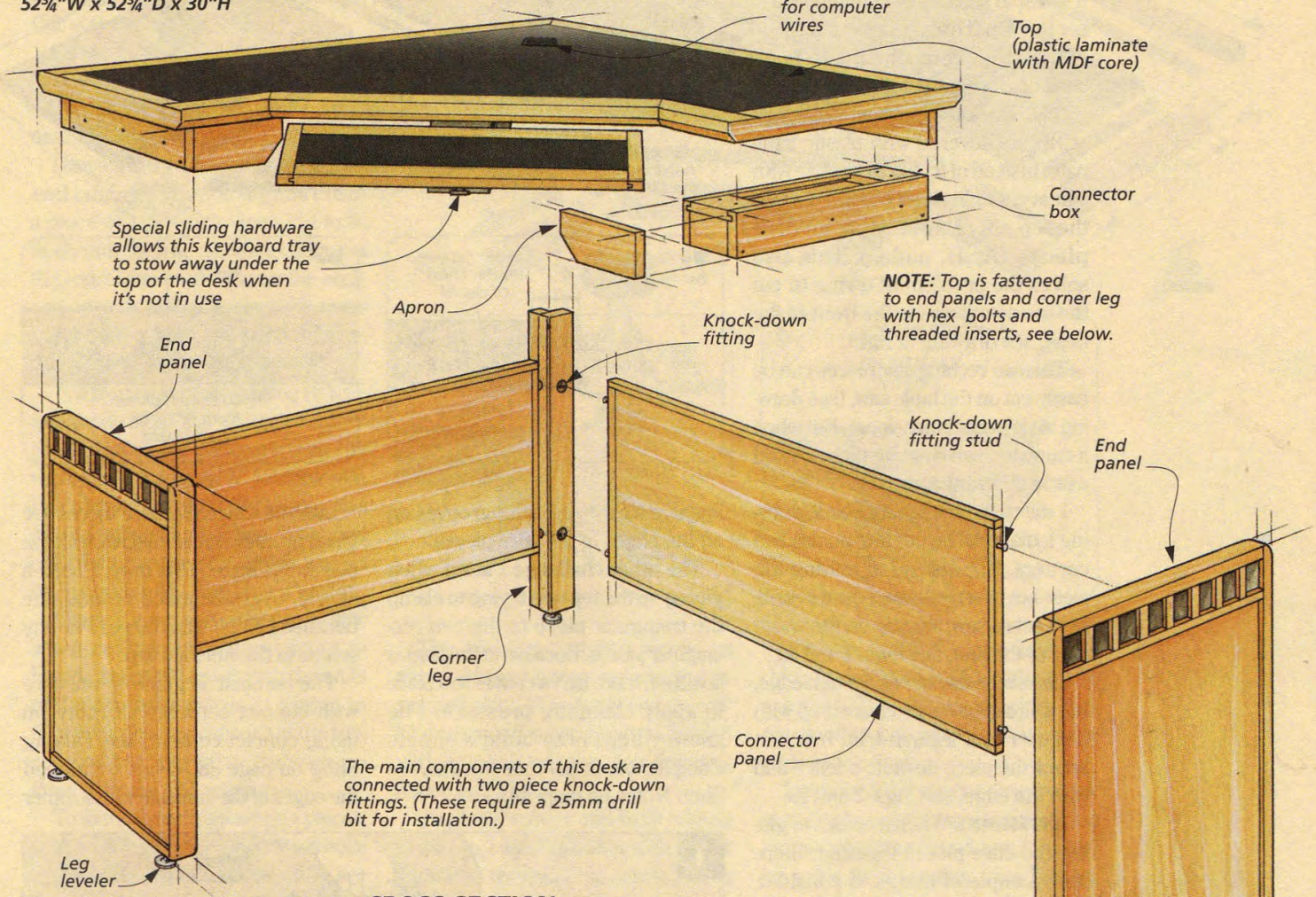

The main components of this desk are connected with two piece knock-down fittings. (These require a 25mm drill bit for installation.)

CROSS SECTION

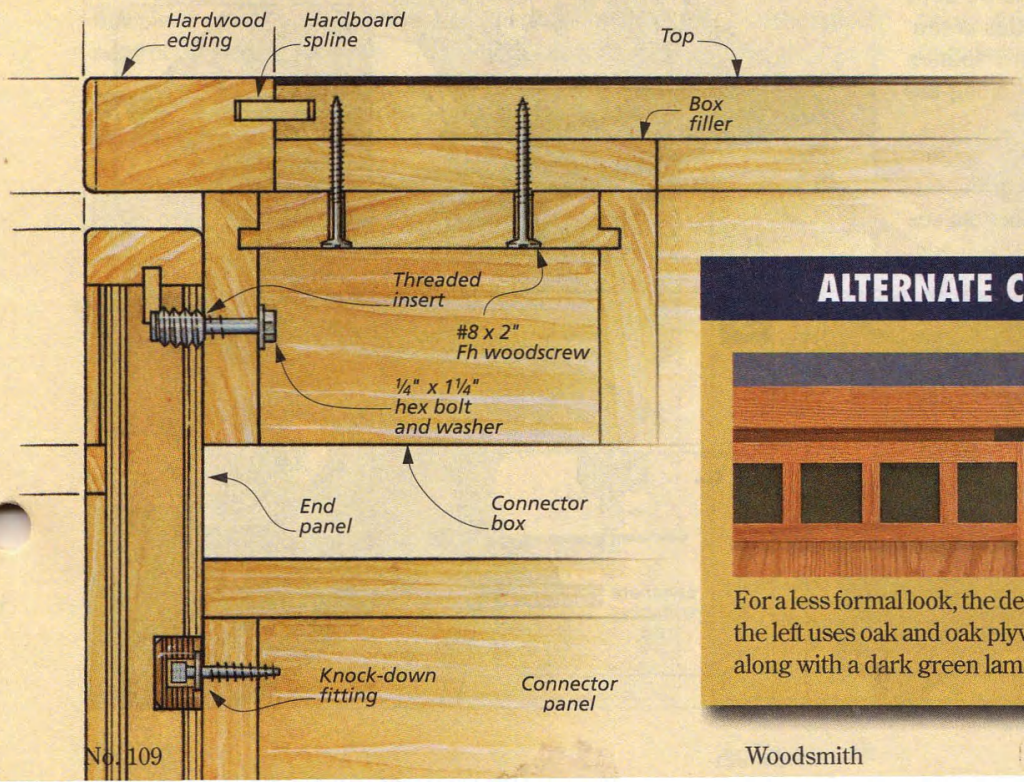

ALTERNATE COLOR COMBINATIONS

For a less formal look, the desk on the left uses oak and oak plywood, along with a dark green laminate.

For the desk on the right, we used maple and maple plywood, with cherry-colored plastic laminate.

Desk Top

Whether you're building the entire computer desk or just the corner unit, it's best to start by building the corner unit top. That's because most of the other components of the desk are fastened to it in some way.

CORE. The top consists of a 3/4"-thick MDF core covered with plastic laminate. Instead of trying to wrestle with a heavy, single sheet of MDF, I made the top out of three separate **core pieces (A, B,** and **C)**. This also solves the problem of trying to cut the inside miters for the front of the desk, see drawing at right.

The two rectangular pieces can be easily cut on the table saw, (see drawing at right for dimensions). But when it came to the triangular piece, I used a little different approach.

I started with a square blank, drawing a diagonal layout line across two corners. But instead of cutting the piece out on a table saw, I used a handheld sabre saw, staying on the waste side of the line, see Figs. 1 and 1a.

The sabre saw leaves a rough edge, but this can be easily cleaned up with a router and a flush-trim bit. Just screw the piece down to a fence and trim the edge, see Figs. 2 and 2a.

CORE ASSEMBLY. When it comes to gluing the core pieces together, there are a couple of things to consider. First, the pieces need to be kept aligned. The solution to this is simple; I used 1/4" hardboard splines inserted into grooves cut along the edges of the core pieces.

I cut the grooves for the splines with a router and a slot-cutting bit, see detail 'a' above. And since splines will also be used later to attach edging around the top, I cut grooves on *all* the edges of the core pieces.

The other challenge I faced when gluing up the top was trying to clamp the triangular piece to the two rectangular pieces. Because of the angles involved, there isn't a convenient place to apply clamping pressure. The answer here is to build a simple clamping block (for more on this, see Shop Notes on page 18).

LAMINATE. Once the core pieces are glued up, they can be covered with the plastic laminate. This time, I used a single, oversize piece of laminate because I didn't want there to be any seams in the finished top.

The laminate is glued to the core with contact cement (for more on using contact cement, see Talking Shop on page 33.) Then I trimmed the edges of the laminate with a router

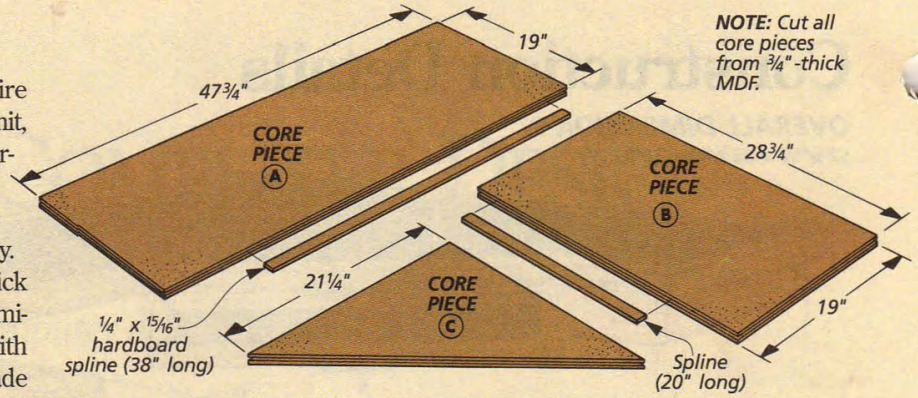

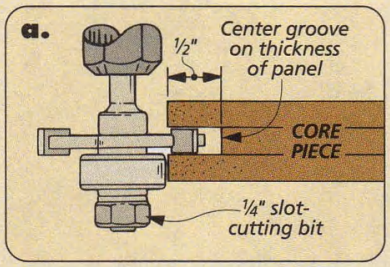

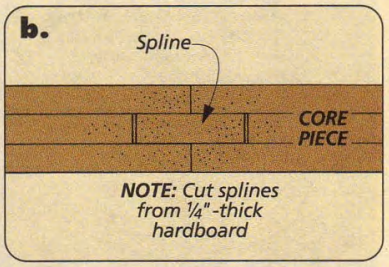

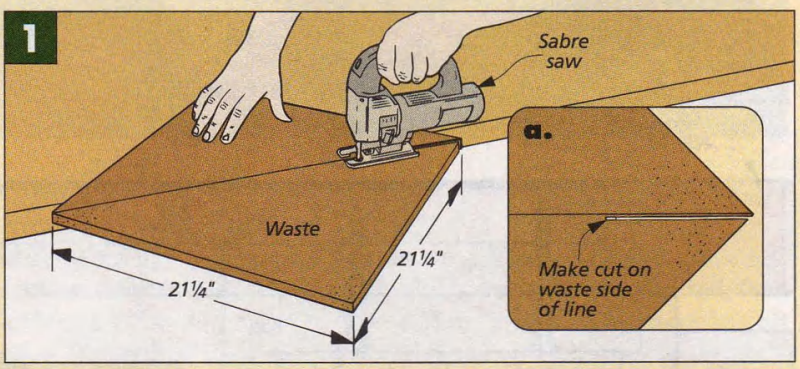

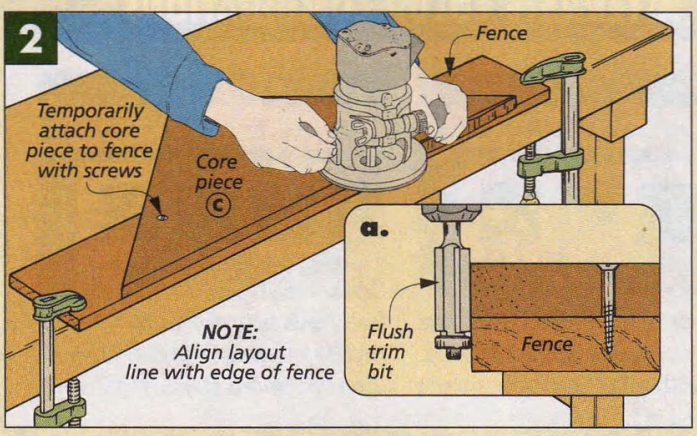

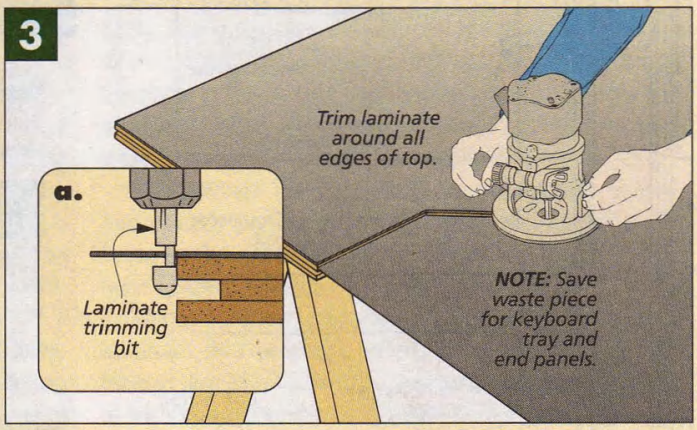

and a special, solid-carbide bit, see Figs. 3 and 3a. The tight radius of this bit allows it to trim all the way up to the inside corners of the desk top, (for sources, see page 35).

EDGING. To finish off the top, I added hardwood edging to conceal the edges of the MDF and plastic laminate, see drawing at right.

I started at the ends of the desk. The **end edging (D)** is nothing more than a piece of 1½"-thick stock cut to fit flush with the front and back edges of the top. Grooves are cut on the ends and one edge of each piece for some hardboard splines, see detail 'a'. Then the edging can be glued in place.

The **front** and **back edging (E)** are also made from 1½"-thick stock, but their profiles are different than the end edging, see detail 'b'. Starting with extra-long blanks, I cut the grooves for the splines first. Then I rounded over the top edge and ripped a bevel on the underside, see Figs. 4 and 4a.

There's a certain order to follow when cutting the edging pieces to length. I started by mitering the ends of the two back pieces of edging to fit around the back corner of the top, see drawing. The other ends are cut flush with the end edging.

To fit the three front edging pieces, start with the center piece. Both ends of this piece are mitered at 22½°, see drawing above. And the the length of this piece should equal the diagonal edge of the front of the desk.

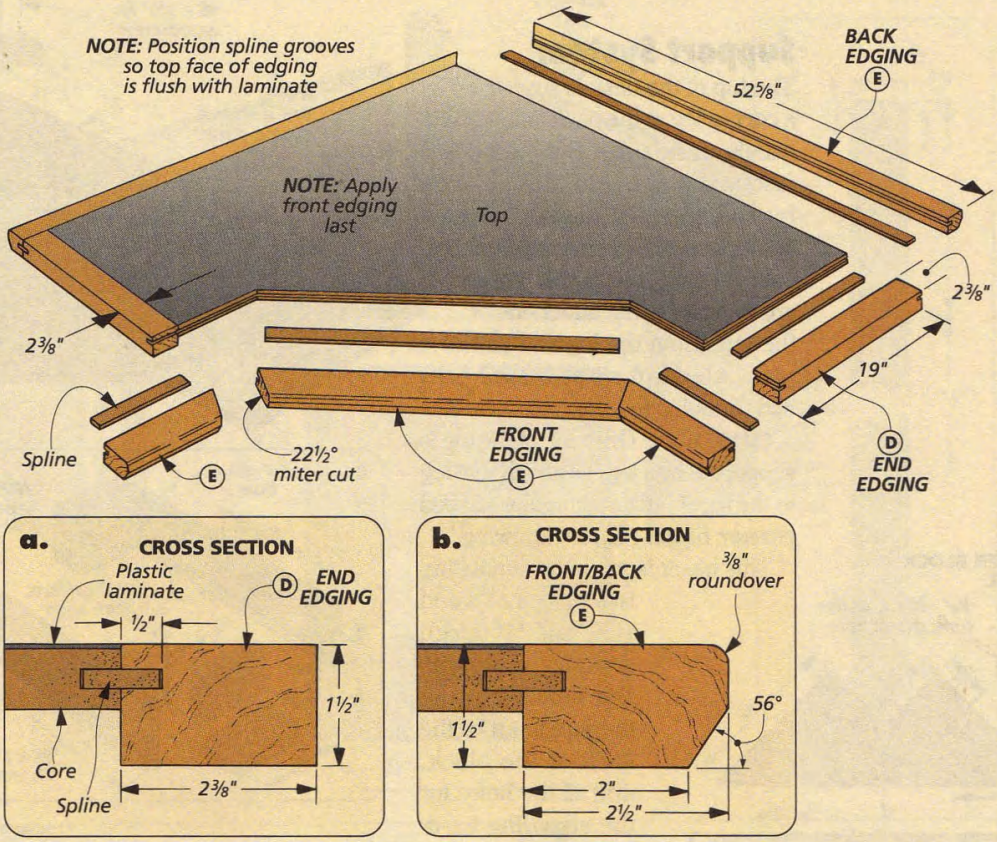

The two front edging pieces on either side of the center piece are also mitered at 22½°, but only on one end. The other end is cut square to fit flush with the end edging, see drawing above and Fig. 5.

To glue the front and back edging to the top, I used splines and the same clamping technique as when gluing up the core pieces (see page 18).

FACING STRIPS. To conceal the splines and the exposed end grain at the ends of the top, I added a couple of ⅛"-thick **facing strips (F)** to the ends, see Fig. 5. These facing strips are simply glued and clamped in place at the ends of the desk.

I removed the overlapping material at the lower corners of the facing strips with a small hand saw, followed by some light sanding, see Fig. 5a. Then I rounded over the edges of the facing strips with a router and a ⅛" round-over bit, see Fig 5b.

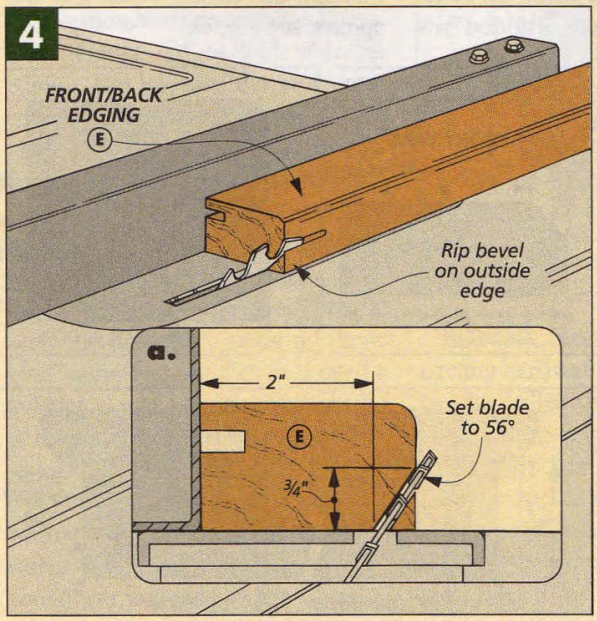

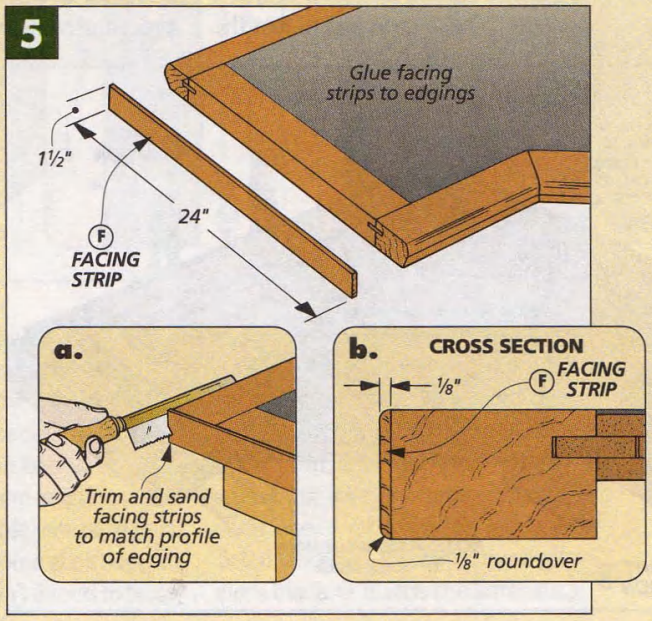

Support System

The top of the desk is supported by a corner leg at the back and two end panels on the sides. But the top isn't fastened directly to these pieces. Instead, there's a support "system" comprised of a corner block and a pair of connector boxes. These are fastened to the underside of the top. Then the leg and panels are attached to these pieces with bolts and threaded inserts.

CORNER BLOCK. The back of the top is supported by a leg. To attach that leg to the top, I built a triangular-shaped **corner block (G)**, see drawing.

This block is made by laminating two pieces of wood ($1\frac{3}{4}$" and $\frac{3}{4}$"-thick), see drawing at right. But before cutting the notch out of the back of the block, drill all the holes for the attaching hardware, see drawing in margin at left.

Since the top edging is thicker than the top core, you'll have to make a **block filler (H)** to create a level surface for mounting the corner block to the top, see drawing. This spacer is simply glued to the top core. Then the corner block can be screwed in place.

CONNECTOR BOXES. In addition to the corner block, a pair of connector boxes are mounted to the top, see drawing. These are used to join the end panels with the top.

Each connector box has two **sides (I)**, two **tops (J)**, and two **ends (K)**, see detail 'a'. The tops are attached to the sides with $\frac{1}{4}$" x $\frac{1}{4}$" tongue and groove joints. But the ends are simply cut to fit between the sides and then glued and screwed in place.

As with the corner block, I added a couple **box fillers (L)** to the underside of the top before attaching the connector boxes, see drawing above. These are just glued in place.

APRONS. To conceal the corner block and connector boxes, I added $\frac{3}{4}$"-thick aprons to the front and back of the desk, see Fig. 6.

Aside from their lengths, the only difference between the **back aprons (M)** and the **front aprons (N)** is the roundover on the edges, see Fig. 6c. And the lower corners of the front aprons are lopped off so you don't hit your knees on them, see Fig. 6a.

The front aprons are simply glued to the connector boxes and the top, see Fig. 6. But with the back aprons, I also drove a couple of screws through the corner block into the aprons, see Fig. 6b.

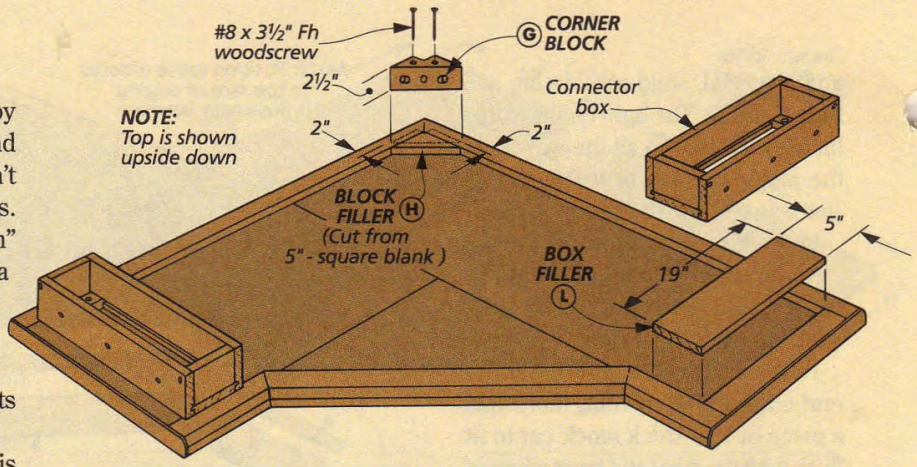

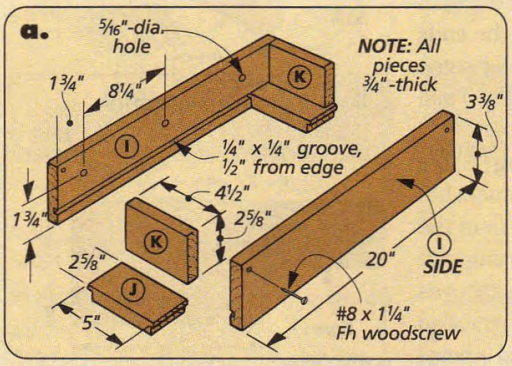

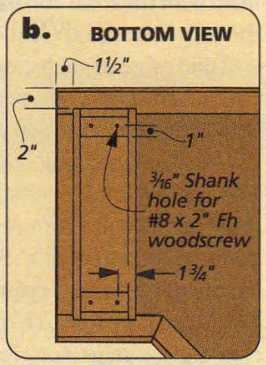

CORNER BLOCK DETAIL

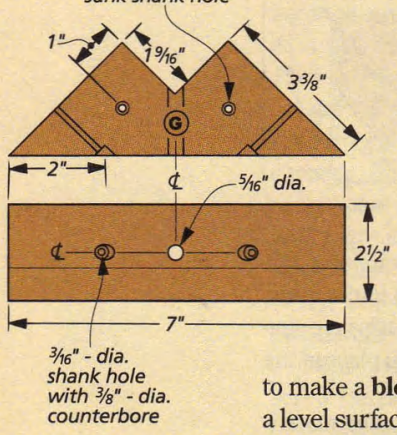

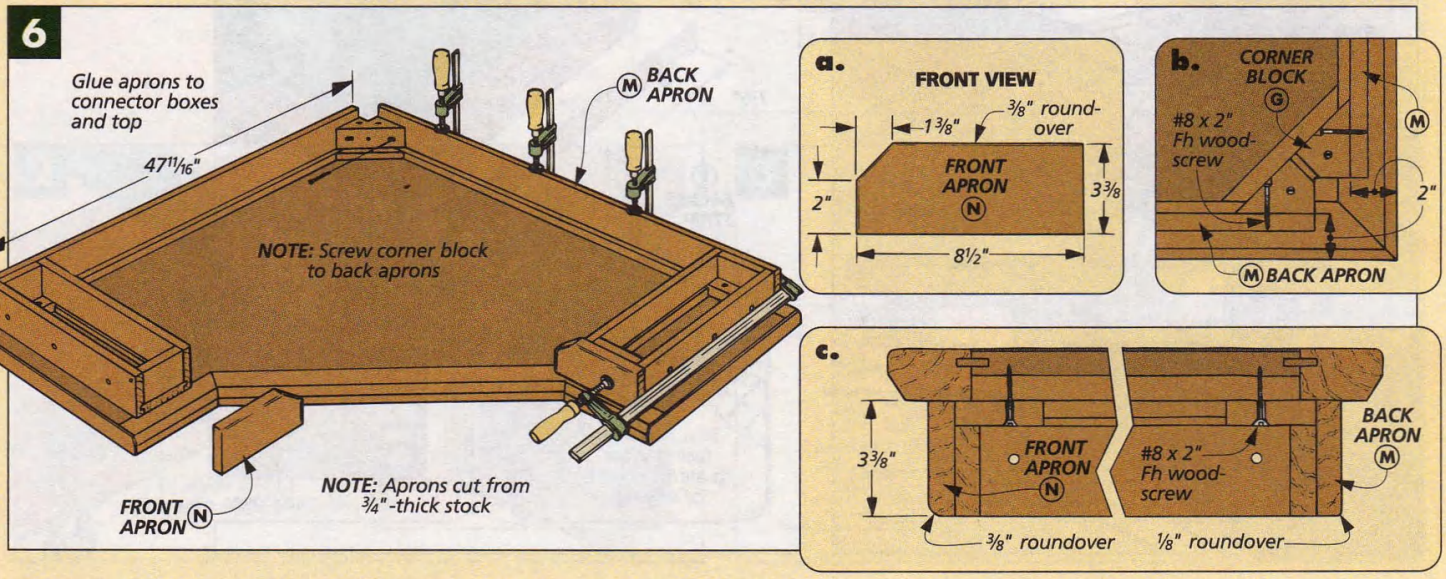

End Panels

With the aprons added, you can begin work on the two end panels that support the ends of the desk, see drawing at right.

Like the top, each end panel starts off as a 3/4"-thick MDF **core (O)** (21 3/8" x 26 1/2"), see Fig. 7. But this time, I laminated both sides with 1/4"-thick plywood. These plywood **skins (P)** are cut slightly oversize and then flush-trimmed after they're glued on with contact cement.

The outside face of each panel has a narrow band of plastic laminate at the top to match the top of the desk,see Fig. 7. To position this laminate, I drew a layout line on one side of each panel 2 1/8" down from the top. Using contact cement, I glued down an oversize piece of laminate flush with the layout line and then flush-trimmed the other three sides.

Next, I applied some 3/4"-thick hardwood **edging (Q)** to the panel, see Fig. 8. This edging is wider than the thickness of the panel to create an overhang around the outside face, see detail 'b' above. To attach the edging, I cut grooves in both the panels and the edging, and inserted hardboard splines, see Fig. 7a.

DIVIDER STRIPS. After the edging was glued in place, I added wood **divider strips (R)** to the plastic laminate on the outside of each panel to create a row of "windows," see Fig. 8.

The trick to making these strips is getting them to the correct thickness. They should end up flush with the edging. But because the horizontal strips are glued to the plywood instead of the laminate, they need to be a little thicker than the vertical strips.

Gluing the strips down is easy. The horizontal strips are glued to the plywood, just below the laminate. Then the vertical strips are glued directly onto the laminate, using a "super glue" adhesive, see Fig. 8a. I used a gel glue to make it easier to apply the adhesive without getting any excess glue on the plastic laminate.

To soften the look of the panels, I routed a 3/8" radius on all four corners, see Fig. 8a. Then a 1/8" roundover is routed on the edges.

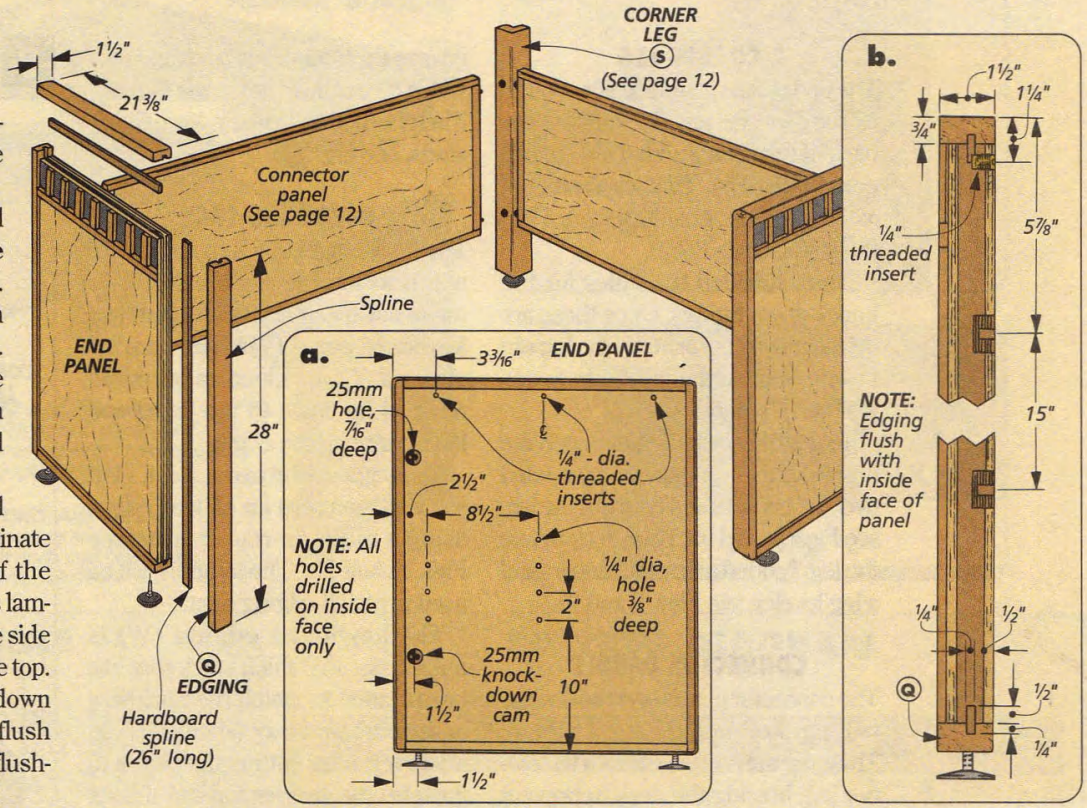

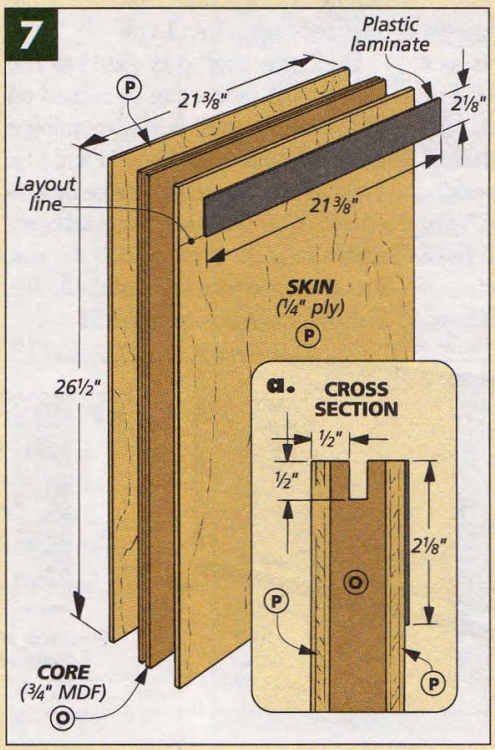

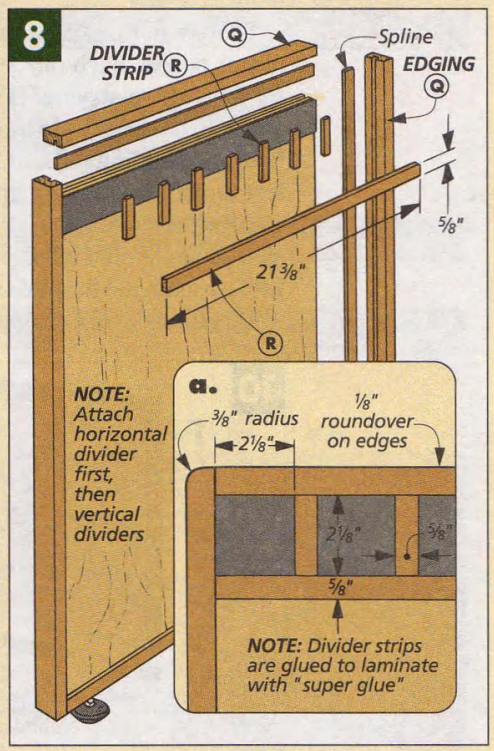

HARDWARE. Next, holes for the connecting hardware and shelf supports can be drilled on the inside face of each panel, see details 'a' and 'b' above. First are the two 25mm-dia. holes for the knock-down fitting cams.

Then, drill a double row of 1/4"-dia. holes 3/8"-deep for some shelf support pins. Note: If you don't intend to building the extension wings, you can omit drilling the holes for the shelf pins.

Finally, three threaded inserts are installed at the top of each panel.

To complete the end panels, I added leg levelers to the bottom of each one, 1 1/2" from the sides, see detail 'a' above. (I painted my leg levelers black to match the laminate.)

CORNER LEG

The end panels alone are not enough to support the top. To support the back of the desk, I added a V-shaped **corner leg (S)**. This leg starts out as 3" x 3" post glued up from 1½"-thick stock, see Fig. 9.

Next, I drilled the holes for the knock-down fittings. Once these are drilled, the back corner of the leg can be cut away on the table saw to create the "V" shape.

To get the corner leg to match the profile of the end panels, I rounded over the corners and edges of the leg, see Figs. 9a and 9b. Then to complete the leg, I added a threaded insert and a leg leveler, see Figs. 9 and 9b.

CONNECTOR PANELS

The connector panels serve an important purpose in the overall design. They join the end panels with the corner leg, bracing the desk to prevent it from racking.

There's not much to these connector panels. Each one starts as a ¾"-thick plywood **panel (T)**, see Fig. 10. Then the panels are framed with hardwood **edging (U)**. I found it easiest to rip the edging a little wider than the thickness of the panels. Then after gluing it on, I trimmed it flush with a router and flush trim bit.

After trimming the edging, I rounded over the top and bottom edges only with a ⅛" round-over bit, see Fig. 10a. Then I added the knock-down fitting studs, see Fig. 10b.

KEYBOARD TRAY

The final step in building the corner unit is to add the keyboard tray. To make this tray, I started by cutting a **keyboard panel (V)** to size from ¾" plywood. Then I glued an oversized piece of laminate to the panel and flush-trimmed the edges.

To complete the panel, I cut, I cut ¼" x ¼" tongues on all four edges using a router in router table, see Figs. 11 and 11a. The tongues will be used to attach edging next.

The **keyboard edging (W)** is made from 1¾"-thick stock that has been planed to match the thickness of the keyboard tray (about 13/16", in my case). After cutting the pieces to final size, the grooves and stub tenons can be cut on a router table or table saw, see Figs. 11 and 11a.

Once the edging is glued to the panel, a ⅜" radius can be routed on each corner, as well as a ⅛" roundover on all the edges, see Figs. 11 and 11a. Then the keyboard tray can be mounted to the desk with some special hardware (see page 19 for details). Finally, the grommet can be installed, see drawing on opposite page. W

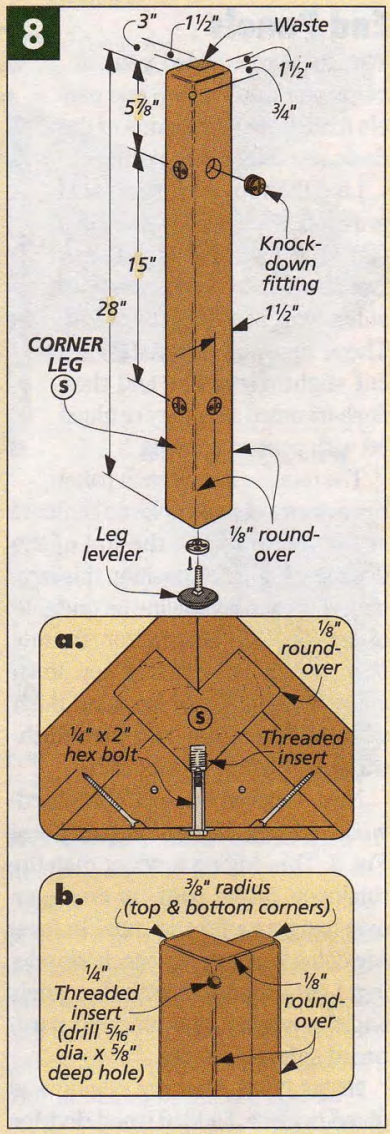

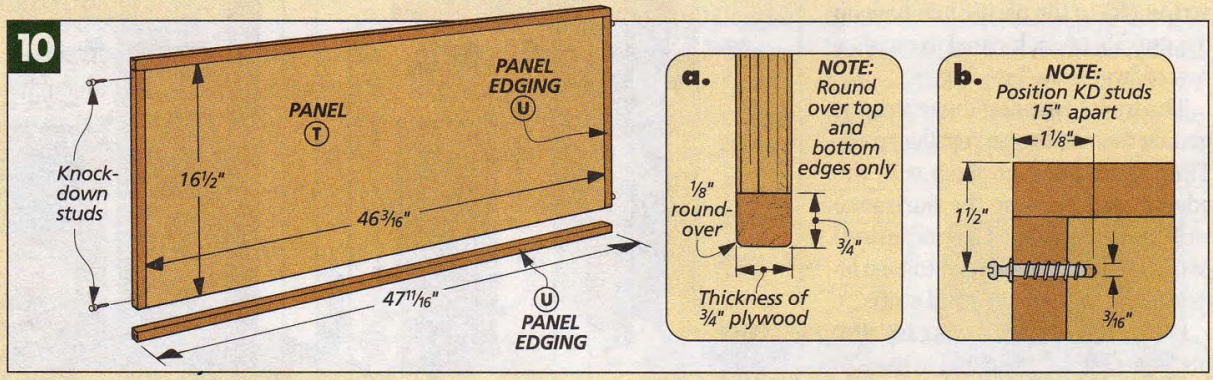

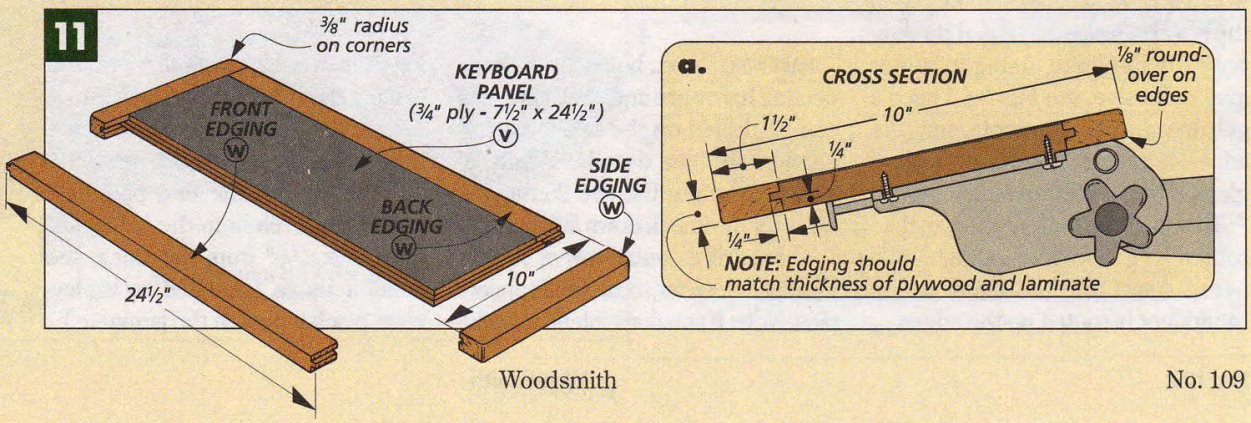

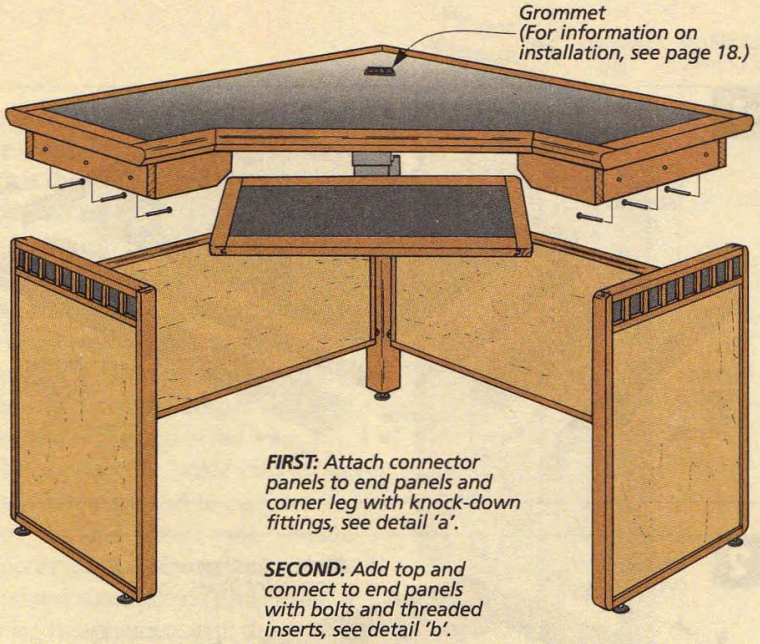

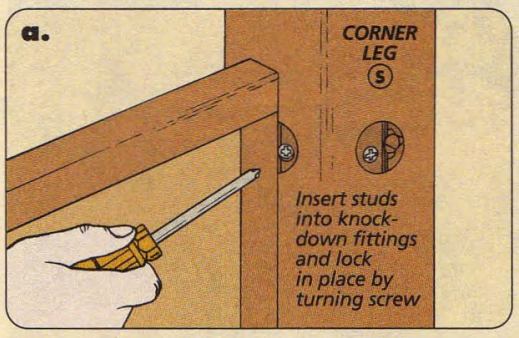

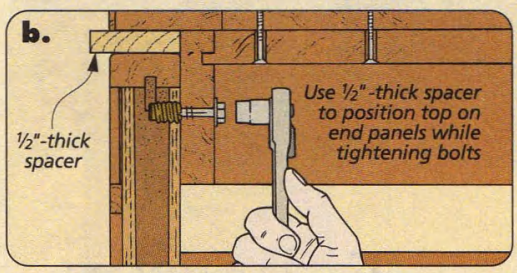

MATERIALS

Top

A	Core Piece (1)	¾ MDF - 19 x 47¾
B	Core Piece (1)	¾ MDF - 19 x 28¾
C	Core Piece (1)	¾ MDF - 21¼ x 21¼
D	End Edging (2)	1½ x 2⅜ - 19
E	Front/Back Edging (2)	1½ x 2½ - 86 (rgh.)
F	Facing Strips (2)	⅛ x 1½ - 24
G	Corner Block (1)	2½ x 5 - 5
H	Block Filler (1)	¾ x 5 - 5
I	Conn. Box Sides (4)	¾ x 3⅜ - 20
J	Conn. Box Tops (4)	¾ x 2⅝ - 5
K	Conn. Box Ends (4)	¾ x 2⅝ - 4½
L	Box Fillers (2)	¾ x 5 - 19
M	Back Aprons (2)	¾ x 3⅜ - 47 11/16
N	Front Aprons (2)	¾ x 3⅜ - 8½

*Also needed 22 lin. ft. of ¼ x 15/16 hardboard splines

End Panels/Corner Leg

O	Panel Cores (2)	¾ MDF - 21⅜ x 26½
P	Panel Skins (4)	¼ ply. - 21⅜ x 26½
Q	Edging (4)	¾ x 1½ - 50 (rgh.)
R	Dividers (2)	¾ x ⅝ - 38 (rgh.)
S	Corner Leg (1)	3 x 3 - 28

*Also needed 16 lin. ft. of ¼ x 11/16 hardboard splines

Connector Panels/Keyboard Tray

T	Panels (2)	¾ ply. - 46 3/16 x 16½
U	Edging (4)	¾ x ¾ - 64 (rgh.)
V	Keyboard Panel (1)	¾ ply. - 7½ x 24½
W	Keyboard Edging (2)	13/16 x 1½ - 35 (rgh)

SUPPLIES

- (7) ¼"-20 ID Thrd. Inserts
- (8) #8 x 1¼" Fh Woodscrews
- (10) #8 x 2" Fh Woodscrews
- (2) #8 x 3½" Fh Woodscrews
- (6) ¼" x 1¼" Hex Bolts
- (1) ¼" x 2" Hex Bolt
- (7) ¼" Washers
- (8) Knock-down Fittings
- (1) 4" x 2" Rect. Grommet
- (1) Keyboard Tray Slide
- (5) Leg Levelers, 1⅝"-dia. with ⅜"-dia. shaft

CUTTING DIAGRAM

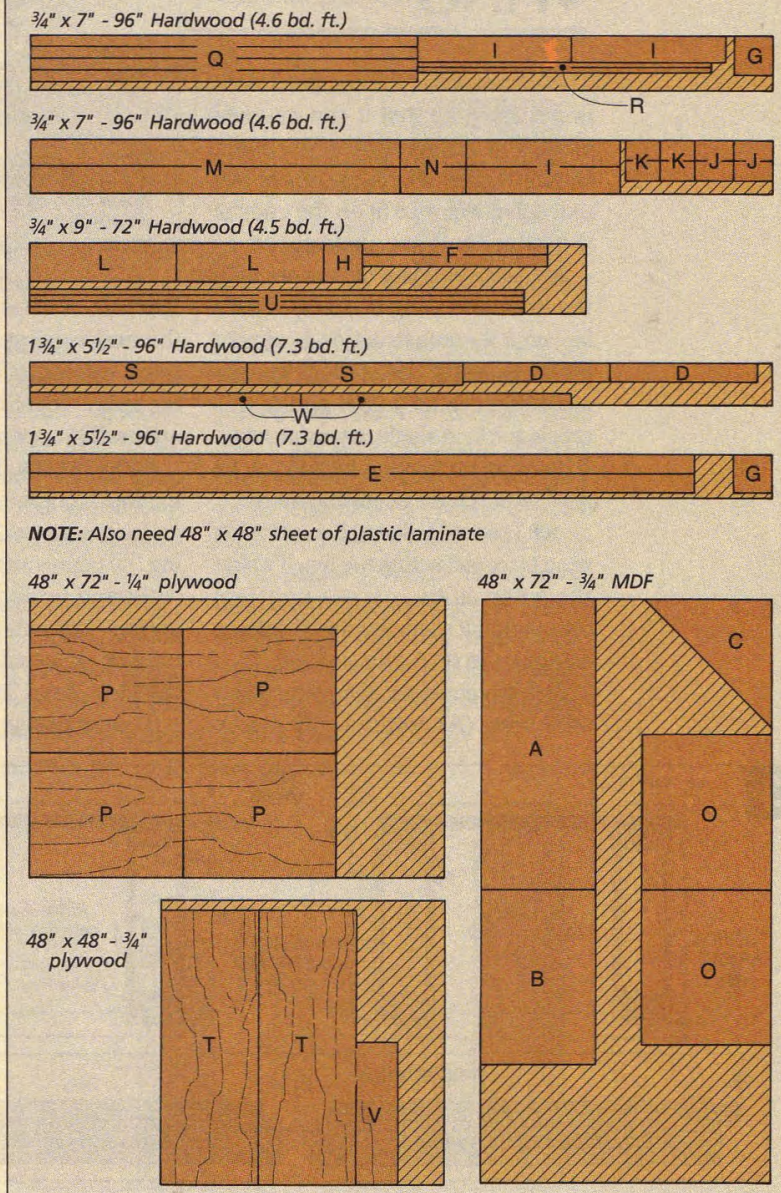

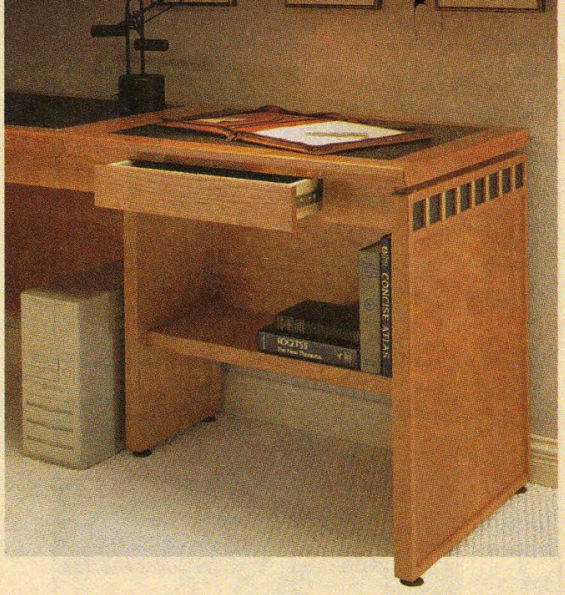

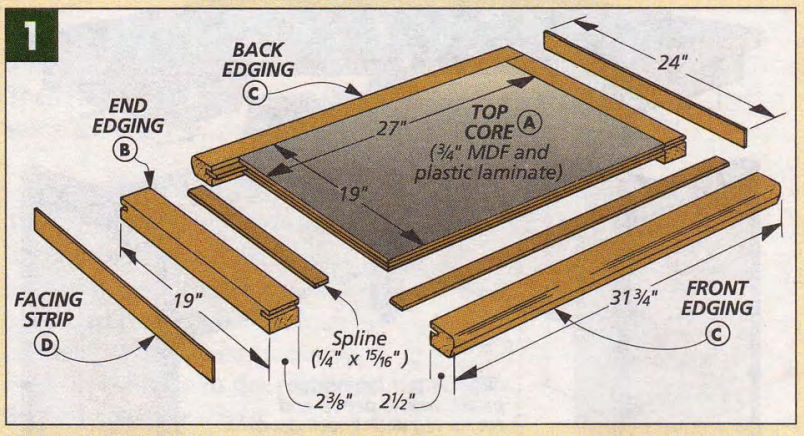

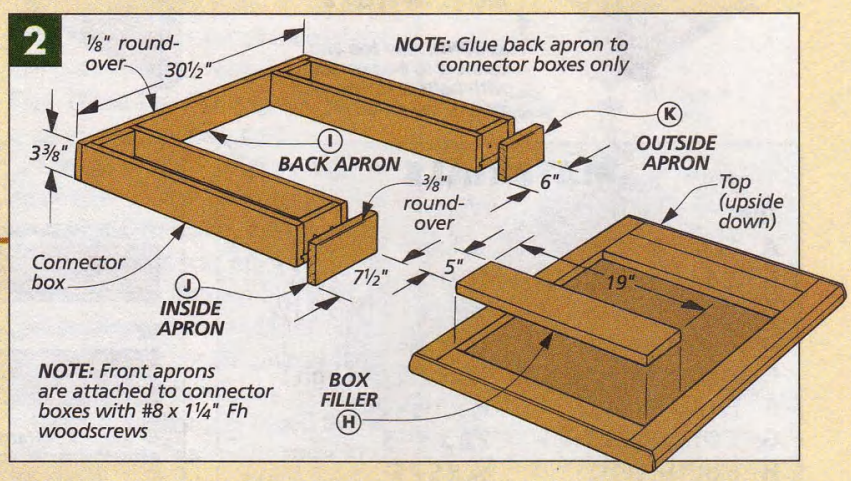

EXTENSION WING

The corner unit of the computer desk is designed so that it can be used alone. But for more space, you might want to consider building one or two extension wings to fit on the ends of the corner unit, see photo above.

And after building the corner unit, the extension wing is a snap. That's because the construction is almost identical. Note: The cutting diagram and materials list at the end of this article are for a single extension wing. If you plan on making two wings, be sure to purchase enough material.

TOP. I started building the extension wing by constructing the top. It's built the same as the corner unit top, except that it's smaller and there are no angles to deal with, see Fig. 1.

The top consists of a rectangular MDF **core (A)** covered with plastic laminate. Splines are used to attach the **end edging (B)** and **front** and **back edging (C)**. (Refer to page 9 for spline locations.) Then **facing strips (D)** are applied to both ends.

SUPPORT SYSTEM. The extension wing top also has a pair of connector boxes and some aprons, see Fig. 2. By shifting the connector boxes to the left or right and switching the two front aprons, the extension wing can be used on either side of the corner unit, see Figs. 3 and 3a.

The connector boxes are identical to the ones used on the corner unit. They consist of two **box sides (E)** that are grooved to accept the **box tops (F)**. Then a couple of **box ends (G)** are added. (Here again, see page 10 for a more detailed procedure.)

Once the boxes are complete, you can make a couple of **box fillers (H)** to fit between the boxes and the top, see Fig. 2. Then the boxes can be screwed to the underside of the top.

When it comes to making the **back, inside**, and **outside aprons (I, J, K)**, the profiles are identical to those used on the aprons of the corner unit, but the lengths are different, see Fig. 2. And when cutting the front aprons to finished size, it's important to note they're different lengths — one is longer to span the gap between the corner unit and extension wing.

The back apron is simply glued to the connector boxes. But be careful *not* to glue it to the top itself, since it will have to be shifted along with the connector boxes if you move the extension wing from one side of the desk to the other. And since the front aprons have to be switched in order

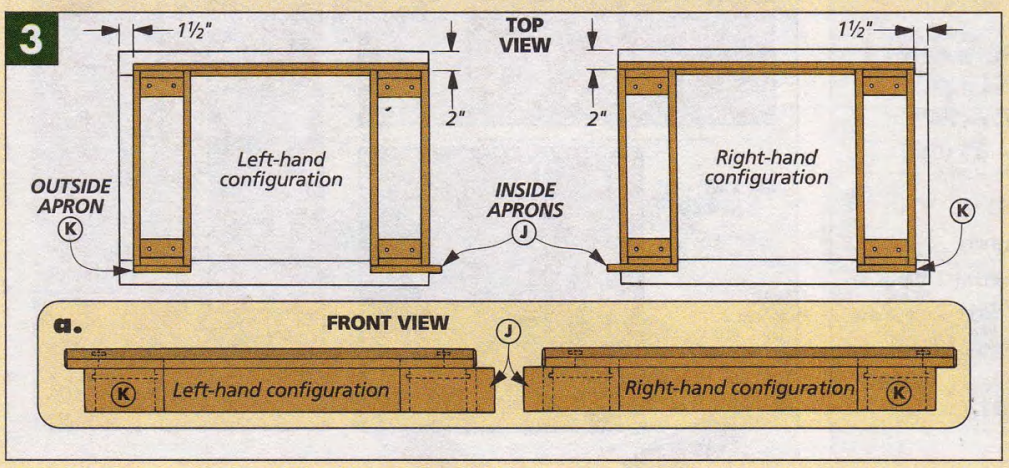

to move the wing, I attached them to the connector boxes with screws rather than glue, see Fig. 2.

SUPPORT PANEL. With the top assembled, you can begin working on the other elements of the extension wing. One end of the extension wing will be supported by the end panel of the corner unit. (The end panel is actually removed from the corner unit and attached to the end of the wing.)

To support the other end of the extension wing and to connect the wing with the corner unit, I built a support panel. This support panel is narrower than the end panel to allow for leg room underneath the desk.

I used two 3/4" plywood **panels (L)** to make up the support panel. This creates a slight problem. The support panel needs to be the same thickness as the end panel (1 1/2") in order to fit between the wing and corner unit. But most 3/4" plywood is actually a little less than 3/4" thick. So I cut several narrow spacers to place between the two pieces of plywood to make their combined thickness 1 1/2", see drawing at right. (You'll have to experiment a little. Mine were a little more than 1/16" thick.)

To conceal the edges of the plywood, I added hardwood **edging (M)** all around the support panel, see detail 'c'. Unlike the edging on the corner unit end panels, the edging on the support panels is flush with both sides. And this time, I didn't use any splines to attach the edging — it's simply glued in place.

Once the edging is attached, a 3/8" radius can be routed on the corners and a 1/8" roundover can be routed on all the edges, see detail 'b'.

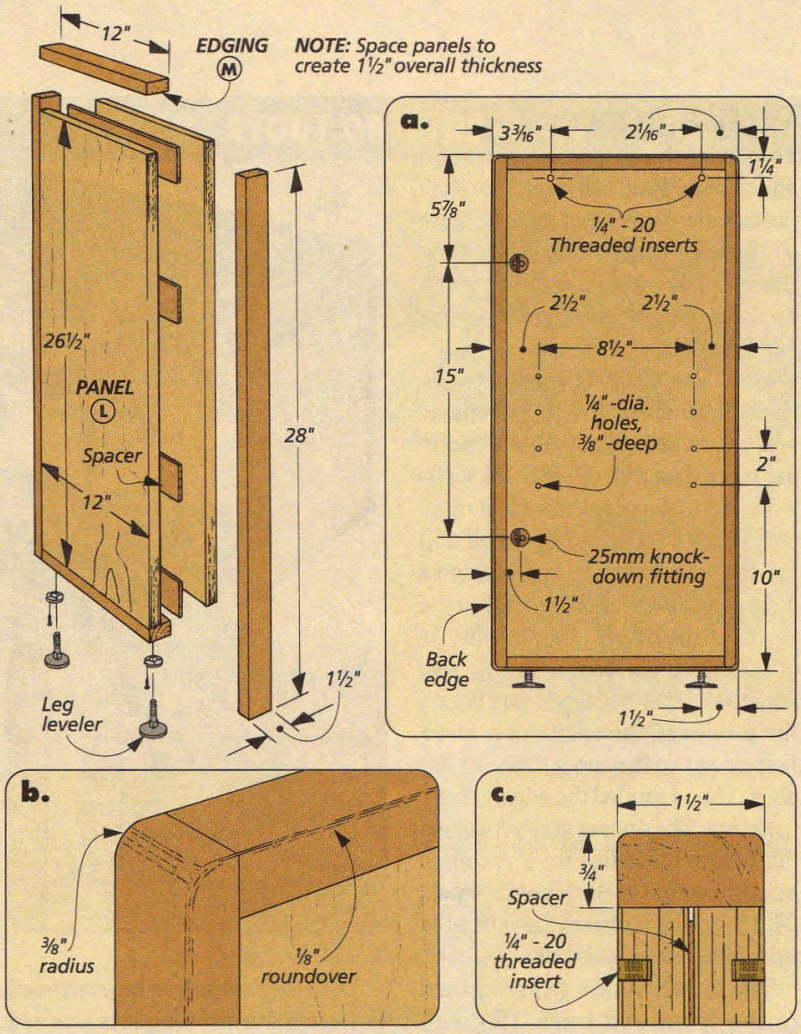

I used threaded inserts to attach the support panel to the connector boxes, see detail 'a'. But since there will be a connector box on both sides of the support panel (one for the wing and one for the corner unit), I installed inserts on each side.

I also installed knock-down fittings on both sides of the support panel to attach the connector panels. Finally, I drilled holes on both sides of the panel for some shelf support pins and added a couple of leg levelers to the bottom of the panel, see detail 'a'.

CONNECTOR PANEL. The extension wing connector panel is identical to the ones used on the corner unit except for its length (30 1/2"), see Fig. 4. To build the panel, I just cut out a plywood **panel (N)** and added some hardwood **edging (O)**, see Figs. 4 and 4a. After rounding over the corners and edges of the panel, I added the studs for the knock-down fittings to both ends, see Fig 4b.

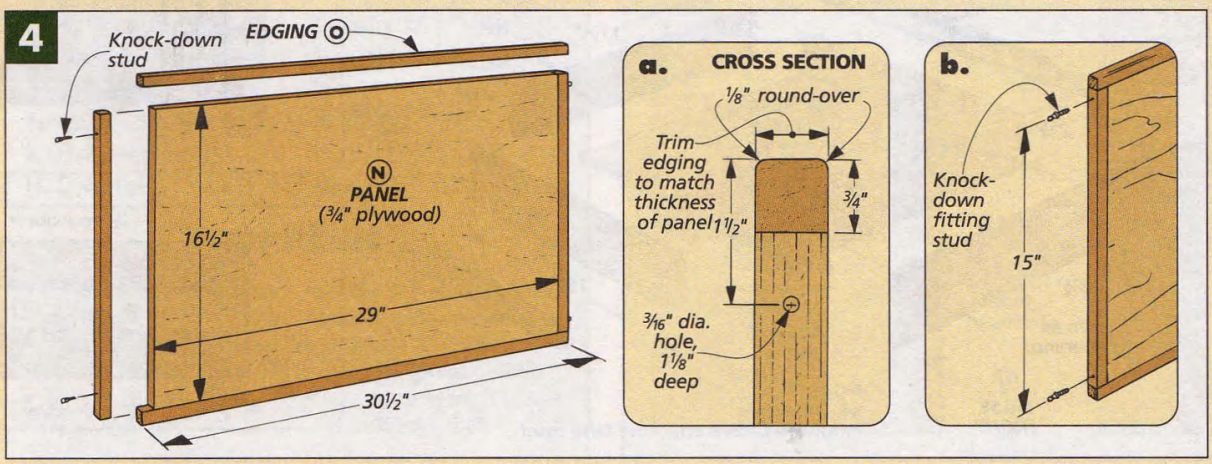

Shelf & Drawer

To complete the extension wing, I added a shelf and a drawer. The shelf provides a convenient area to store all those software manuals. And the drawer makes a handy storage space for some old-fashioned "word processors" — pens and pencils.

SHELF. The **shelf (P)** fits between the end panel and the support panel and sits on brass shelf pins. It's nothing more than a piece of 3/4"-thick plywood cut to size, see drawing at right.

To help strengthen the shelf and conceal the plywood edge, I added a strip of hardwood **edging (Q)** to the front of the shelf. The edging is attached with a tongue and groove joint, see detail 'a'. Note: I positioned the groove so the edging was just a hair proud of the top surface of the shelf. Then I sanded the edging flush.

DRAWER. The drawer fits in the opening between the two front aprons. I made it out of 1/2"-thick poplar stock, with a 3/4"-thick cherry false front to match the aprons, see Fig. 5.

The drawer **sides (S)** are joined to the **front** and **back (R)** with machine-cut dovetails. (I used a router and a dovetailing jig to make these.) Then I cut a 1/4"-deep groove on the inside face of all four pieces for a drawer **bottom (T)**, see Fig. 5a.

DRAWER HARDWARE. Once the drawer is glued up, it can be mounted to the desk. To do this, I used full-extension drawer glides, see Fig. 5. Mount the glides to the drawer first, centering them on the sides, see Fig. 5b.

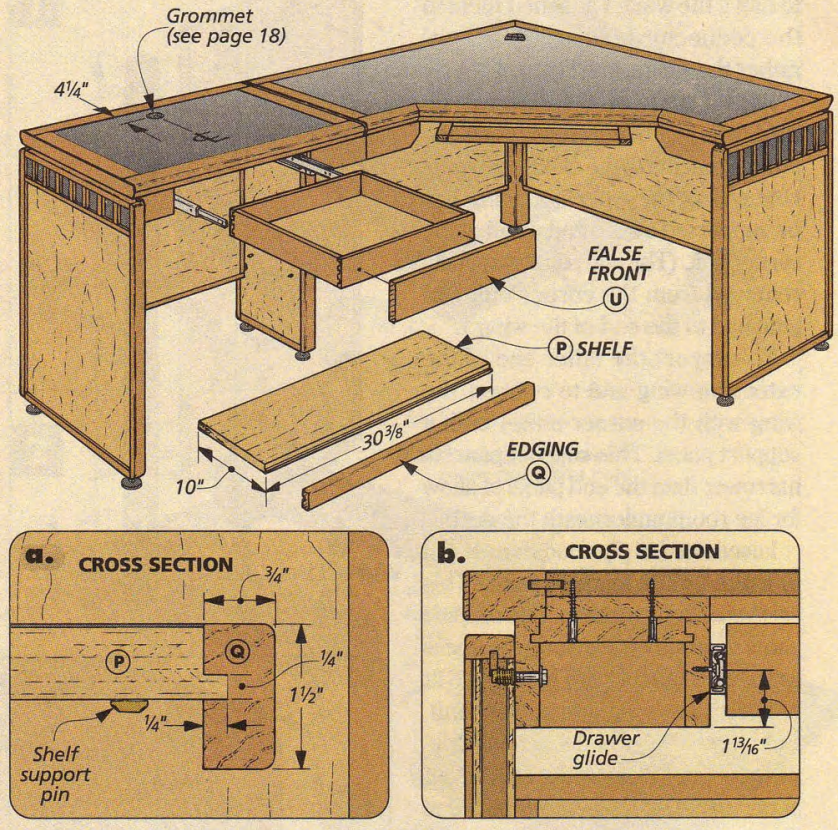

Then the drawer can be positioned in the opening and the glides attached to the connector boxes, see detail 'b' above. Note: The drawer should be positioned so that it hangs 1/4" below the front edging of the top.

After the drawer is mounted and adjusted to fit, the **false front (U)** can be added. The false front is just a piece of 3/4"-thick cherry stock. Before mounting the front to the drawer, round over the two bottom edges and the inside top edge, see Fig. 5b. (The outside top edge is left square to match the aprons on either side of the drawer.) Then the false front is attached to the drawer with a couple of screws from the inside.

ATTACHING THE WING. To attach the wing to the desk, simply unbolt the end panel from the corner unit (you'll have to prop up the end of the desk) and fasten it to the end of the extension wing. Now attach the support panel to the desk. Finally, connect the wing to the support panel. W

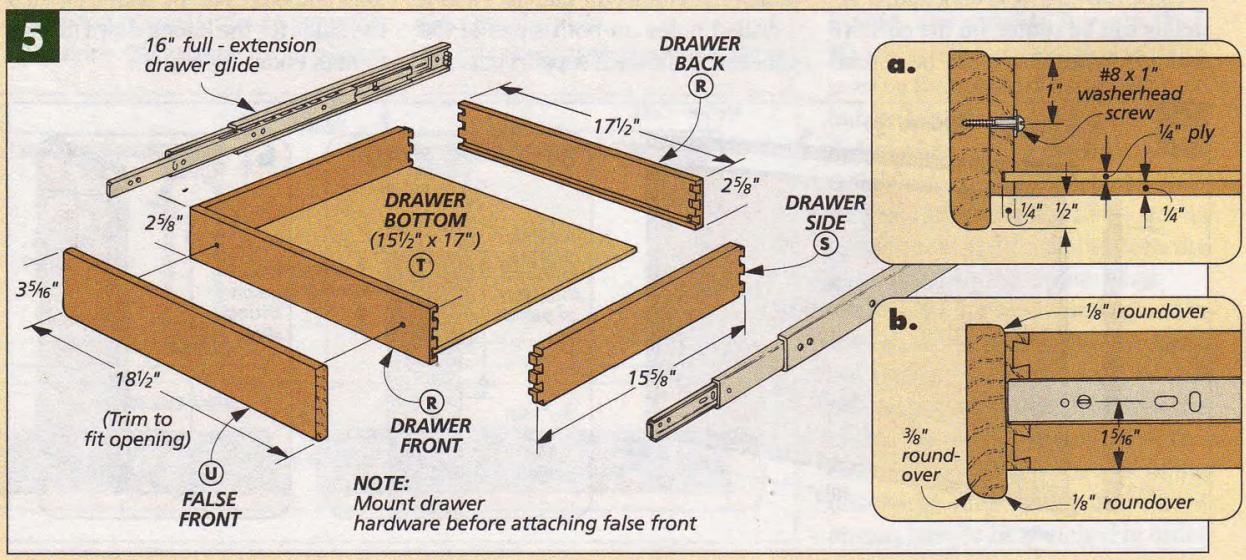

DESK LAYOUT OPTIONS

By itself, the corner unit (lower right) offers plenty of space for a computer. But building a couple extension wings gives you even more possibilities when it comes to arranging the components of the desk. The wings are designed so that they can fit on either side of the corner unit (below). Or they can be placed alongside each other to fit against a long wall (upper right).

Two extension wings can be placed side-by-side.

Extension wings can be added to each side of corner unit.

Single Corner Unit

MATERIALS

*Materials listed below are for one extension wing

WING TOP

A	Top Core (1)	¾ MDF - 19 x 27
B	End Edging (2)	1½ x 2½ - 19
C	Frt./Bk. Edging (2)	1½ x 2½ - 31¾
D	Facing Strips (2)	⅛ x 1½ - 24
E	Conn. Box Sides (4)	¾ x 3⅜ - 20
F	Conn. Box Tops (4)	¾ x 2⅝ - 5
G	Conn. Box Ends (4)	¾ x 2⅝ - 4½
H	Box Fillers (2)	¾ x 5 -19
I	Back Apron (1)	¾x 3⅜ - 30½
J	Inside Apron (1)	¾ x 3⅜ - 7½
K	Outside Apron (1)	¾ x 3⅜ - 6

*Also Needed 8 lin. ft. of ¼ x 15/16 hardboard splines

SUPPORT PANEL/CONNECTOR PANEL

L	Support Panel (2)	¾ ply. - 12 x 26½
M	S. Panel Edging (2)	¾ x 1½ - 41 (rgh.)
N	Conn. Panel (1)	¾ ply. - 16½ x 29
O	C. Panel Edging (2)	¾ x ¾ - 48 (rgh.)

DRAWER/SHELF

P	Shelf Panel (1)	¾ ply. - 10 x 30⅜
Q	Shelf Edging (1)	¾ x 1½ - 30⅜
R	Drw. Frt/Back (2)	½ x 2⅝ - 17½
S	Drw. Sides (2)	½ x 2⅝ - 15⅝
T	Drw. Bottom (1)	¼ ply. - 15½ x 17
U	Drw. False Front (1)	¾ x 3 5/16 - 18½

SUPPLIES

- (6) ¼"-20 ID Thrd. Inserts
- (12) #8 x 1¼" Fh Woodscrews
- (8) #8 x 2" Fh Woodscrews
- (4) ¼" Brass Shelf Pins
- (6) ¼" x 1¼" Hex Bolts
- (6) ¼" Washers
- (2) #8 x 1" Washerhd. Screws
- (4) Knock-down Fittings
- (1) 2"-dia. Grommet
- (1pr.) 16" Drawer Glides
- (2) Leg Levelers, 1⅝"-dia. with ⅜"-dia. shaft

CUTTING DIAGRAM

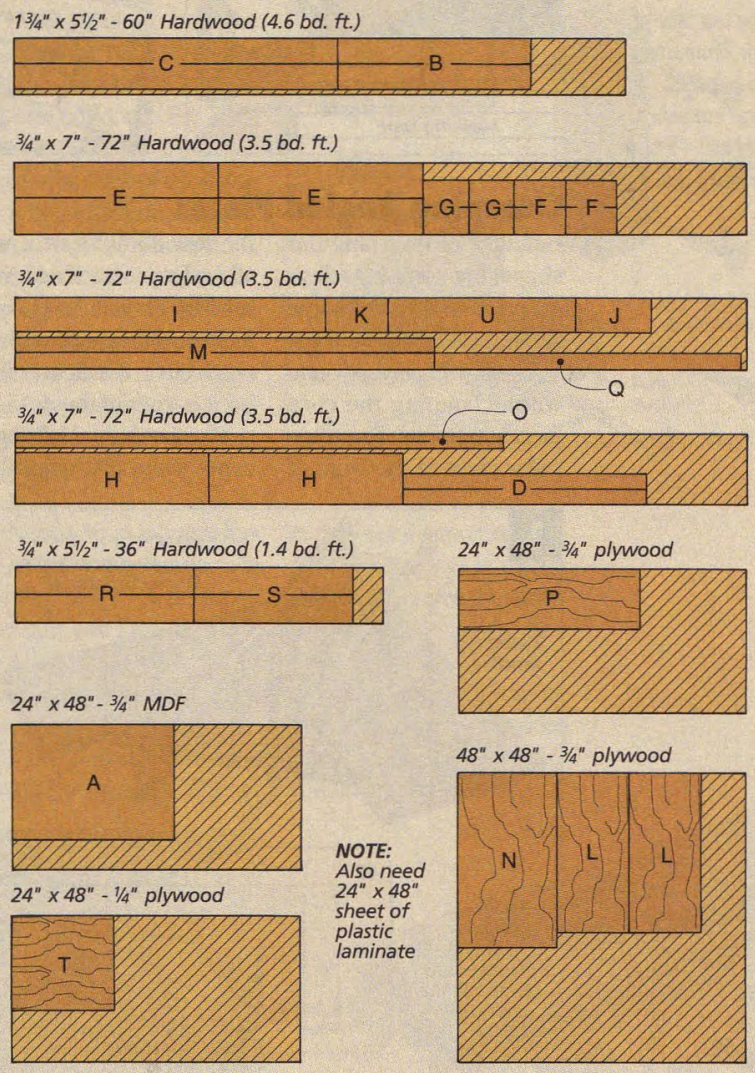

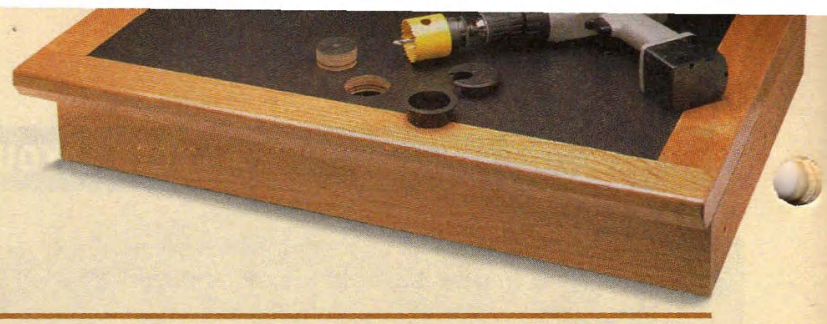

SHOP NOTES

Installing Computer Grommets

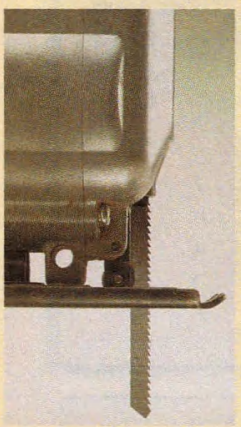

▲ *To prevent chipout on the top face of plastic laminate, I use a special reverse cut sabre saw blade. (The teeth point down.)*

One thing you have to consider when building a computer desk is what to do with all the wires. One solution is to use grommets. These plastic inserts direct the wires under the desk so they're not hanging off the back side.

For the computer desk on page 6, I used two different styles of grommets. (For sources, see page 35.)

ROUND. The easiest grommet to install is a round one. I used these on the extension wings, drilling the 2"-dia. holes with a hole saw, see photo above. (See page 16 for their location.)

RECTANGULAR. On the corner unit, however, I used a larger, rectangular grommet, see Fig. 3.

To lay out the grommet, I taped over the area at the back corner of the desk (so I could see the layout lines). Then I used a combination square to draw the layout lines, see Fig. 1.

Now to create the opening, I drilled a hole in each corner and cut out the waste with a sabre saw, see Fig. 2 and the photo at left.

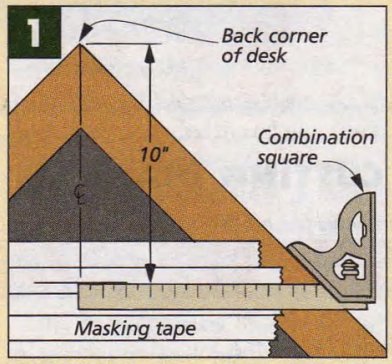

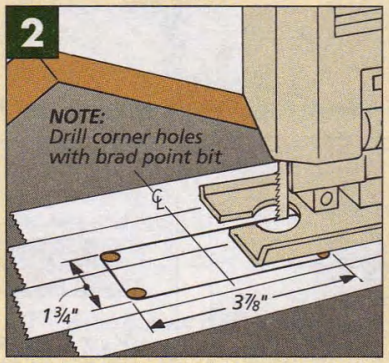

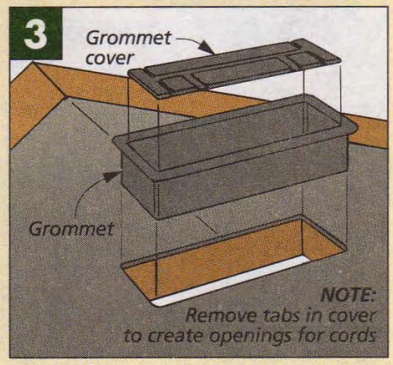

Clamping Angled Pieces

Because of its triangular shape, the computer desk on page 6 required some creative clamping solutions.

The first challenge came when clamping the core pieces together. The triangular piece at the front of the desk doesn't have a parallel edge to attach a clamp, see Fig. 1 below. So I made a clamping block with a notch cut in it to fit over the back corner of the desk.

The second challenge came when clamping the hardwood edging to the back edges. The angled edge in front prevents you from applying clamping pressure along part of the back edge, see Fig. 2.

This time, the solution is to screw a block to the front edge. (The screw holes will be covered by edging later.) This block has two triangles attached to it, which allow you to apply clamping pressure at two different places along each back edge, see Fig. 2a.

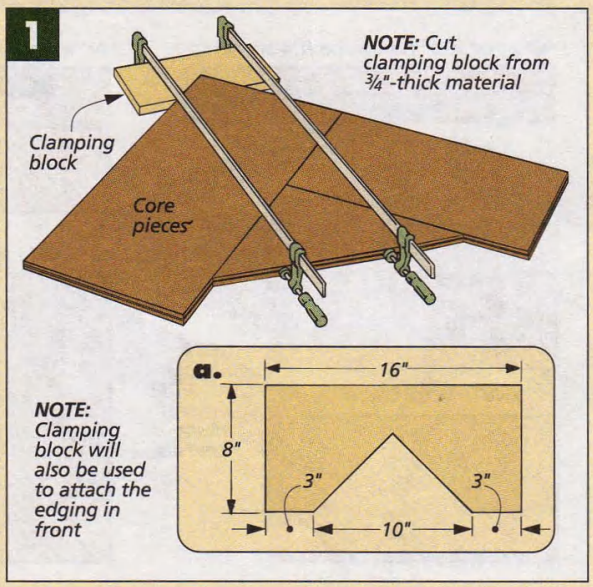

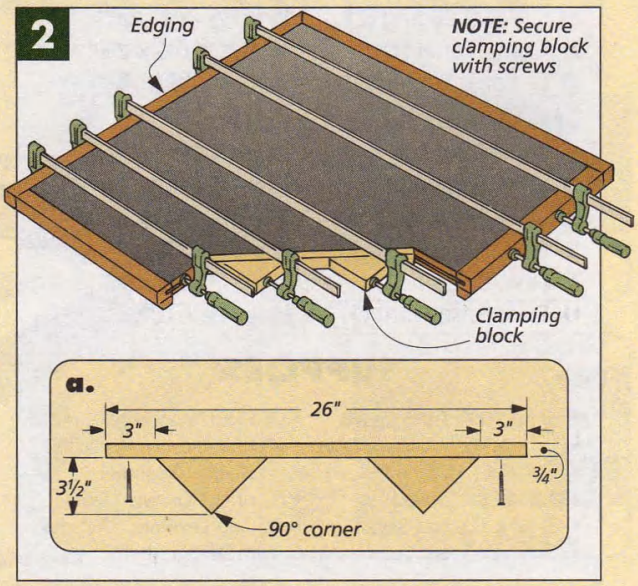

Installing a Keyboard Tray

I like to be able to hide my keyboard under my desk when I'm not working at the computer. So I bought sliding hardware for a keyboard tray and installed it at the front of the desk. (See page 35 for sources.)

Installing this hardware is easy to do. There are just two pieces: a bottom plate and a tray holder.

BOTTOM PLATE. I mounted the bottom plate first. It's simply centered underneath the desk and is screwed in place, see Fig. 1.

Because the edging on the desk hung below the top core, I set the plate against the edging and screwed it to the core. This gave me plenty of clearance to slide the keyboard tray out past the front edge of the desk.

TRAY HOLDER. Next, I placed the tray holder in the grooves on the plate, slid the holder forward, and locked it in "working position." Then I set the keyboard tray I made (see page 12) on the holder, centered it, and screwed it in place.

Finally, to prevent the tray holder from sliding out the back, I screwed a rubber stop into the back of the bottom plate, see Fig. 1.

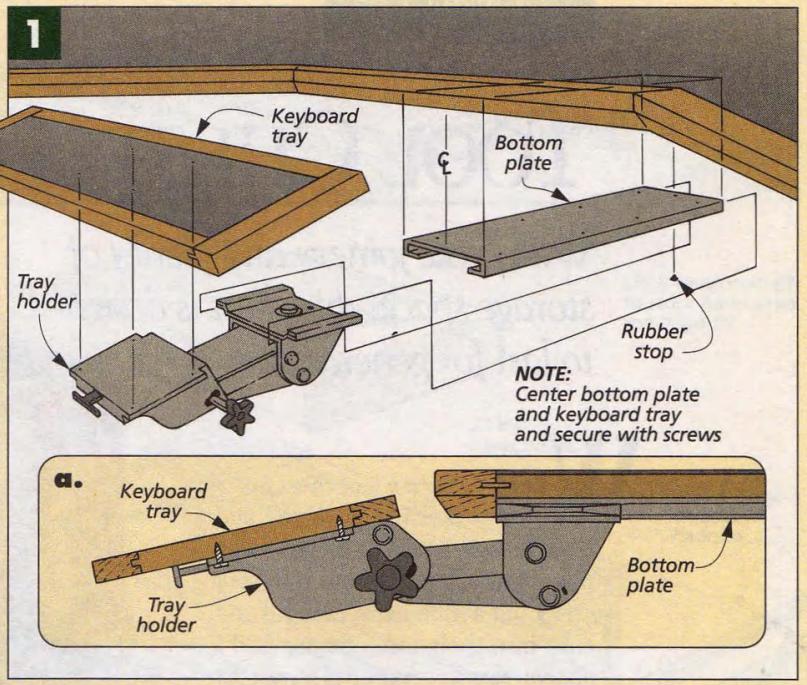

Tool Holders

The lid of the tool chest on page 20 is a great place to store small hand saws. To do this, I made simple tool holders from scrap pieces, see photo. Both pieces hold the saw blade, but one has a turn button so you can get the saw in and out.

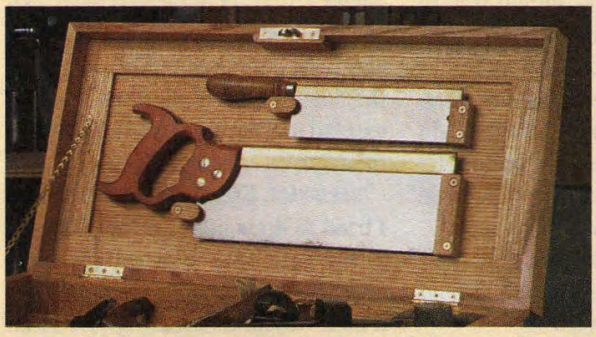

FRONT BLOCK. To hold the front of the blade, I used a block with a single kerf cut on one edge, see Fig. 1.

BACK BLOCK. The block that holds the back of the blade is a bit different. To hold the saw parallel to the lid, this block is thinner. Its outside face lines up with the kerf on the first block. Plus, it has a small turn button (and a washer) that "captures" the blade.

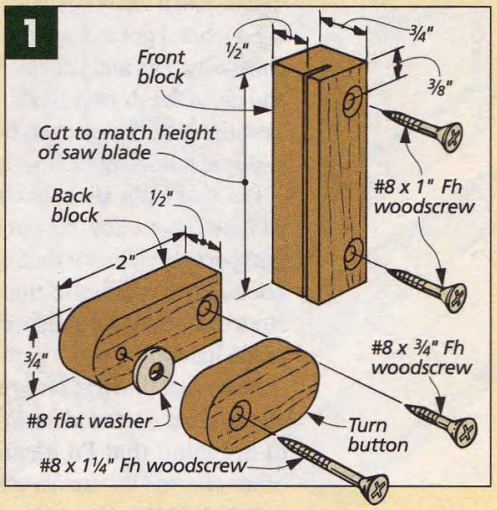

Flush Ring Drawer Pulls

I chose flush ring drawer pulls for the tool chest on page 20 because they don't stick out from the chest and get in the way. But I also like their traditional look.

To install a flush ring pull, the first step is to lay out the position of the pull on the front face of the drawer's false front, see Fig. 1.

Next, I drilled a 1⅛"-dia. hole to provide clearance for the pull, see Fig. 1. (I drilled the hole through the false front. Its inside face will be covered with the drawer front later.)

Now, a square notch has to be cut to create clearance for the "hinge" on the top of the pull, see Fig. 2.

All that's left now is to create the shallow mortise for the plate. To do this, I set the pull in place and traced around it. Then I routed out the mortise with a straight bit set to match the thickness of the plate, see Fig. 3. (Be sure to stay clear of the layout lines.)

Now, all that's left is some final fitting. I pared the sides square with a chisel until the pull fit, see photo.

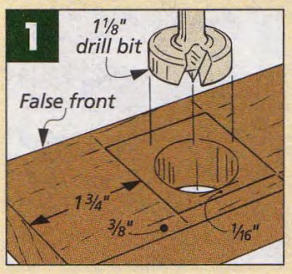

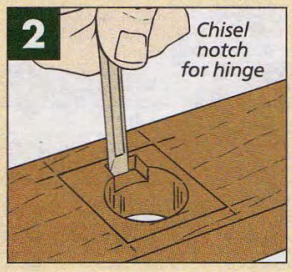

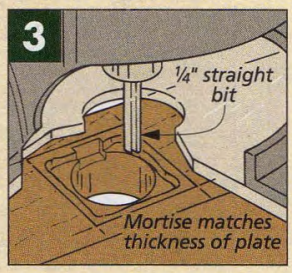

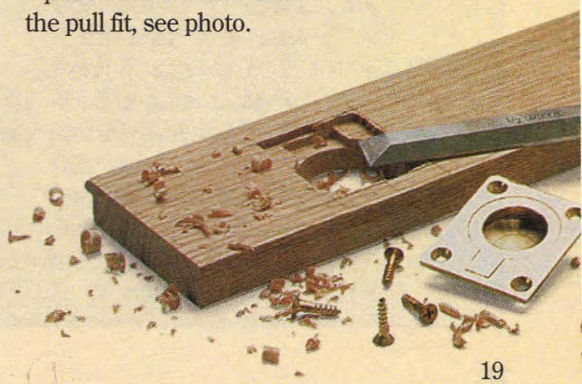

SHOP PROJECT

TOOL CHEST

With basic joinery and plenty of storage space, this chest is designed to last for generations.

Whenever I see a tool chest that a woodworker has designed and built himself, I'm like a kid at Christmas. After all, most craftsmen generally put a little extra thought and care into their tool chests. And I always expect a surprise of some sort — whether it's a clever way to hold a tool or just a well-organized layout.

So when I get a chance to look the chest over, I lift and shut the lid. Open and close the drawers. Slide the tray. Test the lock. I may even try to lift it to see just how much it weighs.

But that's not all. I also take mental notes about how it's put together. I inspect the joinery that was used. Look at the profiles of the molding. Notice any unusual or especially well-made hardware.

So as I sat down to design this tool chest, I had a lot of ideas in the back of my mind that I'd gleaned from other chests I've run across.

TOOL STORAGE. Of course, my first concern was that this chest be able to hold a lot of tools. So I started with a large, deep tool compartment. Then I added a removable sliding tray to keep smaller tools, like my try square and block plane, close at hand.

Then in the base below the main compartment, I included a wide drawer. This drawer will hold a full set of chisels, plus other small tools that you want to keep separate.

Even the lid on this chest can store tools. I made it deep enough to hold hand saws, see page 19.

RAISED PANELS. Because I planned to store a lot of tools in this chest, I wanted it to be sturdy, but still as light as possible. So I used frame and panel construction. This allowed me to use ½"-thick stock without worrying about the chest becoming weak. And the floating panels allow the wood to expand and contract, so wood movement isn't a concern.

HARDWARE. Even with the hardware, I tried to draw on examples I'd seen in the past. (For sources, see page 35.) The flush ring drawer pulls are a nice way of eliminating pulls that stick out in the front of the chest. And the lock I chose has a pin that helps align the lid with the chest. (For more on adding this lock, see page 28.)

SUPPLIES

- (7) #8 x 1¼" Fh Woodscrews
- (9) #8 x 1" Fh Woodscrews
- (3) #8 x ¾" Washerhead Screws
- (2) 1¼" x 1½" Flush Ring Pulls
- (1) Adjustable Ball Catch
- (1pr.) 2" x 1" Brass Hinges
- (1) Full-Mortise Chest Lock
- (12) #5 x ½" Fh Brass Woodscrews
- (1) ⅝" Brass Escutcheon
- (2) 4" Brass Chest Handles
- (1) 12"-long Brass Safety Chain
- (2) #4 x ⅜" Brass Rh Woodscrews
- (2) #6 Brass Washers

CUTTING DIAGRAM

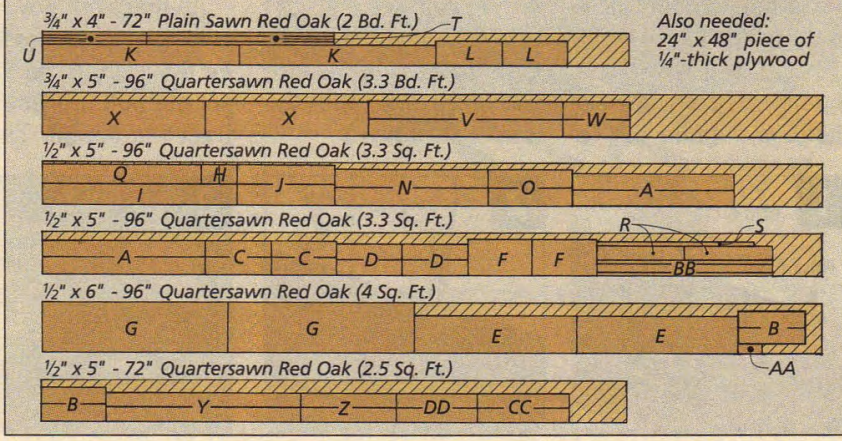

Construction Details

OVERALL DIMENSIONS:
24¼"W x 13⅝"H x 12¼"D

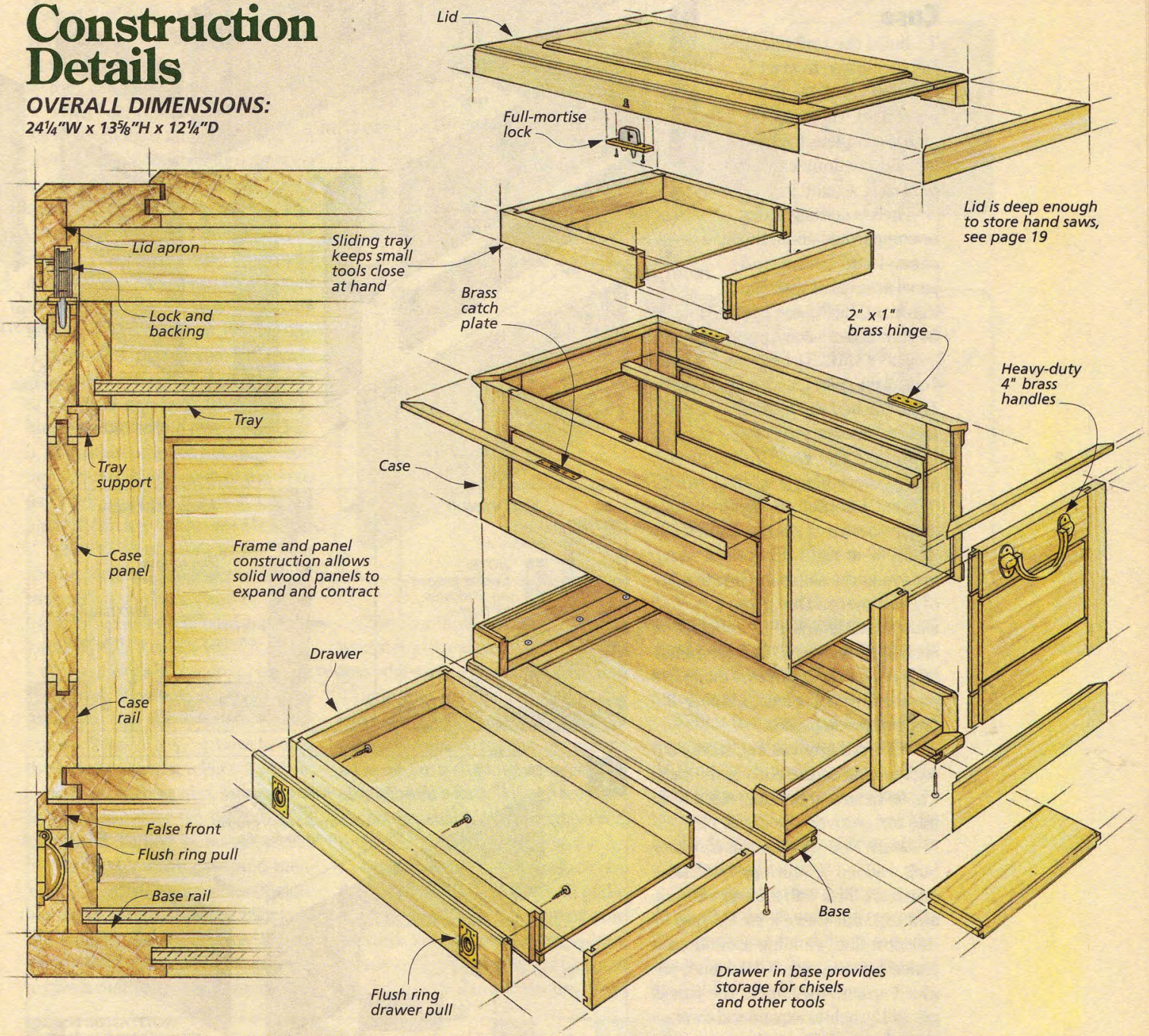

MATERIALS

BOX		**K** Rails (2)	¾ x 2⅜ - 24¼	**U** End Caps (2)	11/16 x ⅜ - 11⅞
A Fr./Bk. Rails (4)	½ x 2 - 20	**L** Stiles (2)	¾ x 3⅛ - 8	**V** Rails (2)	¾ x 2⅛ - 23⅞
B Fr./Bk. Stiles (4)	½ x 2 - 8⅛	**M** Base Panel (1)	¼-ply. x 8 - 18½	**W** Stiles (2)	¾ x 2⅛ - 8⅛
C End Rails (4)	½ x 2 - 8	**DRAWER**		**X** Panel (1)	¾ x 8 - 20
D End Stiles (4)	½ x 1⅞ - 8⅛	**N** Ft./Bk. (2)	½ x 2 3/16 - 18⅞	**Y** Fr./Bk. Aprons (2)	½ x 1¾ - 23⅞
E Fr./Bk. Panels (2)	½ x 4½ - 19⅞	**O** Sides (2)	½ x 2 3/16 - 10⅜	**Z** End Aprons (2)	½ x 1¾ - 11⅞
F End Panels (2)	½ x 4½ - 7⅞	**P** Btm. (1)	¼-ply. x 9⅞ - 18⅞	**AA** Lock Backing (1)	⅜ x 1¼ - 3½
G Btm. Panel (1)	½ x 10⅞ - 22⅞	**Q** False Front (1)	½ x 2⅜ - 19 7/16	**TRAY**	
BASE		**R** Guides (2)	½ x 1¾ - 10⅞	**BB** Tray Supports (2)	½ x ½ - 22½
H Fr. Aprons (2)	½ x 2⅜ - 2 3/16	**S** Stop (1)	½ x ½ - 19⅜	**CC** Tray Sides (2)	½ x 1¾ - 11¼
I Bk. Apron (1)	½ x 2⅜ - 23⅞	**LID**		**DD** Tray Ends (2)	½ x 1¾ - 9⅞
J End Aprons (2)	½ x 2⅜ - 11⅞	**T** Fr./Bk. Caps (2)	11/16 x ⅜ - 23⅞	**EE** Tray Btm. (1)	¼-ply. x 9⅞ - 10¾

Case

To build the tool chest, the best place to start is with the case, see drawing at right. Then after the case is complete, the base and lid sections can be built to fit around it.

There's nothing tricky or complicated about the case. Four frame and panel assemblies make up the front, back, and ends. And the bottom is just a solid wood panel.

RAILS & STILES. To begin on the case, I cut all the **rails (A, C)** and **stiles (B, D)** to finished size for the front, back, and end frames, see drawing at right. (To make the case light but still sturdy, everything is ½"-thick stock.)

Next, I worked on the stub tenons and grooves that join the frames, see detail 'b' at right. First, a ¼"-deep groove is cut along the inside edge of each piece. This groove is 3/16"-wide, which leaves a 5/32" shoulder on each side, see detail 'a'. To automatically center the grooves, I made two passes for each piece, flipping the piece between passes.

With the grooves cut, next I cut stub tenons on the ends of the rails. These tenons are simply sized to fit into the grooves, see detail 'b'.

PANELS. Now with the rails and stiles built, I added ½"-thick panels. These panels are flush with the frames inside and out, but there's an ⅛" gap or "shadow line" running around each panel. This way, when the frames are glued around the panels, the panels will still be able to expand and contract with changes in humidity.

To size the **front/back** and **end panels (E, F)**, dry assemble the frames and sized the panels to fit in the grooves, leaving a 1/16" gap along each edge so the panels will be able to expand, see Figs. 1 and 2b.

Now, creating the ⅛"-wide shadow line is easy. I rabbeted around the edges of the panels to form tongues that fit the grooves in the rails and stiles. These tongues are just like the stub tenons on the rails, only they're 5/16" long, see Fig. 1a.

ASSEMBLY. At this point, the frames can be assembled, see Fig. 2. But be

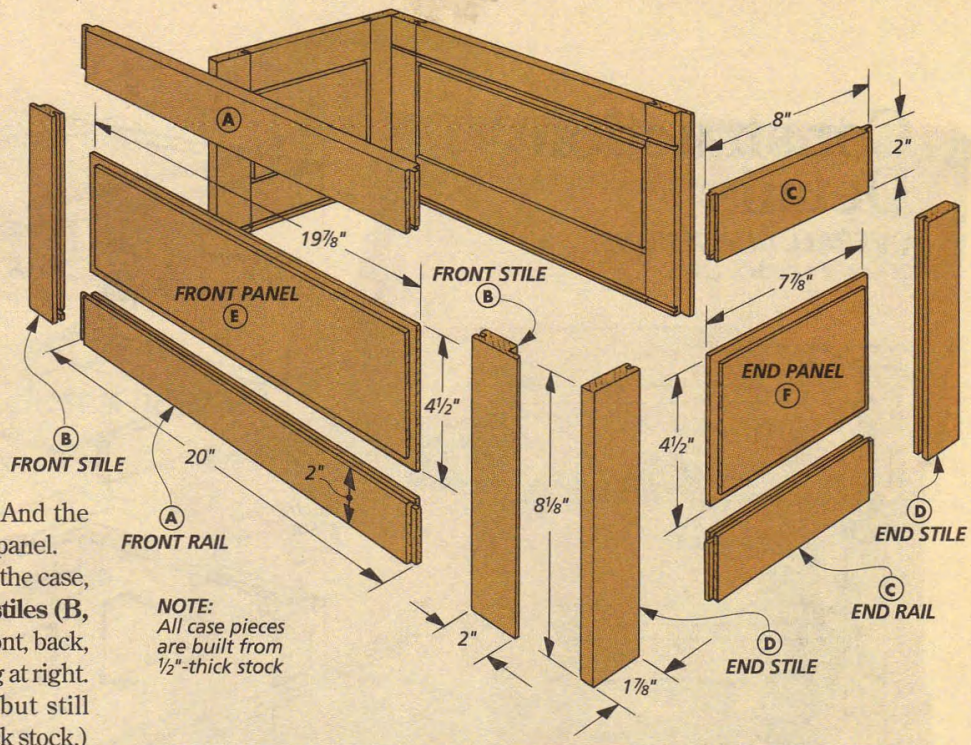

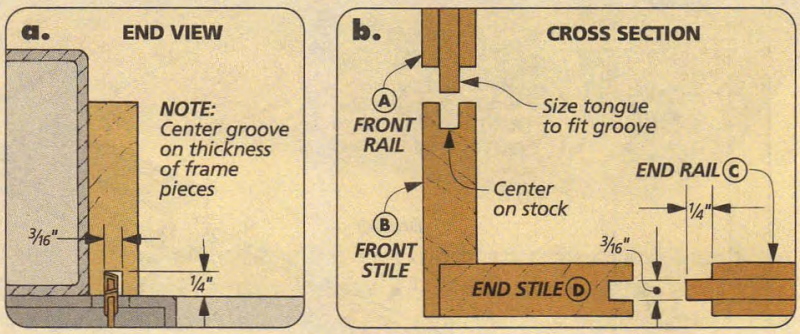

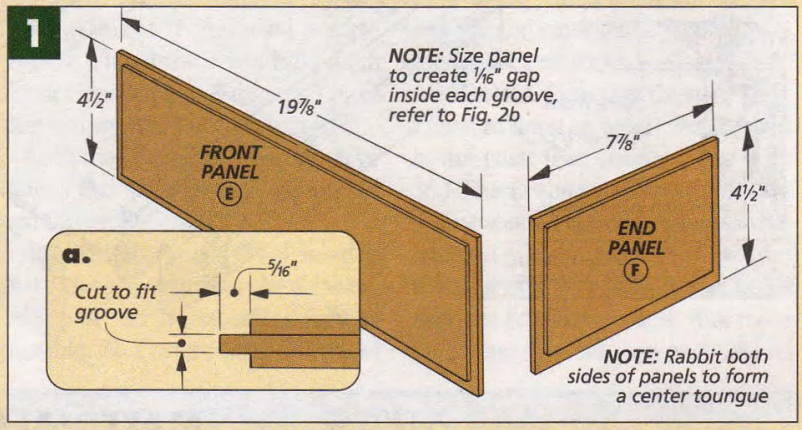

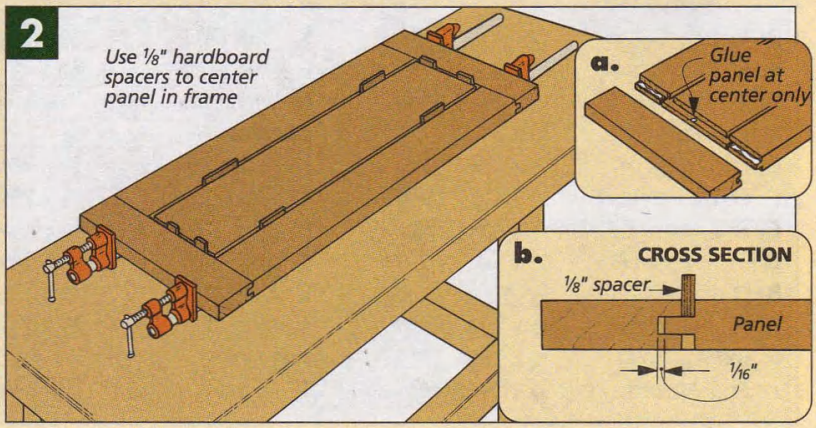

sure to test each assembly to make sure that it's flat and square. And remember, the panels need to "float" so they can expand and contract.

What I didn't want was for the panels to drop down and create uneven shadow lines along their top edges. So to hold each panel in position, I put a spot of glue at the center of the tongues on the *ends* of the panel, see Fig. 2a. (This way, it can still expand out.) Then during assembly, I used 1/8"-thick hardboard spacers to center the panel in the frame, see Fig. 2b.

RABBETS. With the frame and panels glued up, I cut a rabbet on the ends of the front and back frame assemblies to hold the end frames, see Fig. 3. This rabbet creates a stronger corner and also hides most of the front and back panels on the ends, leaving only 1/8"-thick tongues, see Fig. 3a.

GROOVES. Next, I cut a groove near the top edge of the front and back assemblies, see Figs. 4 and 4a. These 1/8" x 1/8" grooves will hold supports for a tray that's added later.

Now, there's one more groove to cut before the assemblies are complete, and this one is cut on all *four* frames. It's a 1/4" x 1/4" groove to hold the bottom panel, see Figs. 4 and 4b.

BOTTOM. At this point, I glued up a 1/2"-thick panel for the **bottom (G)**, see Fig. 5. To find its overall size, I dry assembled the case and measured the inside dimensions (including the grooves). Like the panels in the frames, there should be a 1/16" gap along each edge of the bottom panel to give it room to expand, see Fig. 5a.

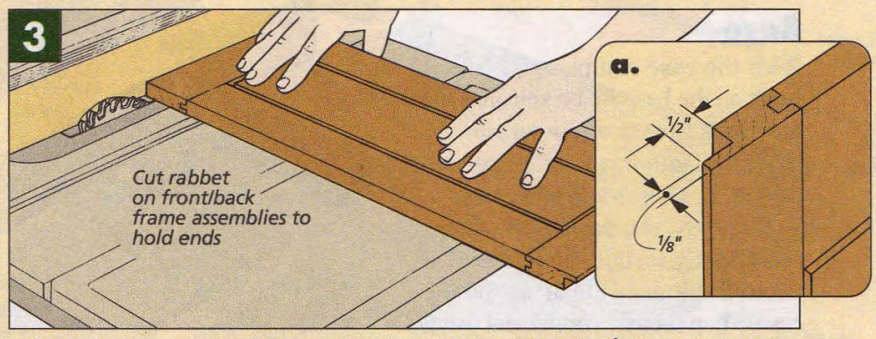

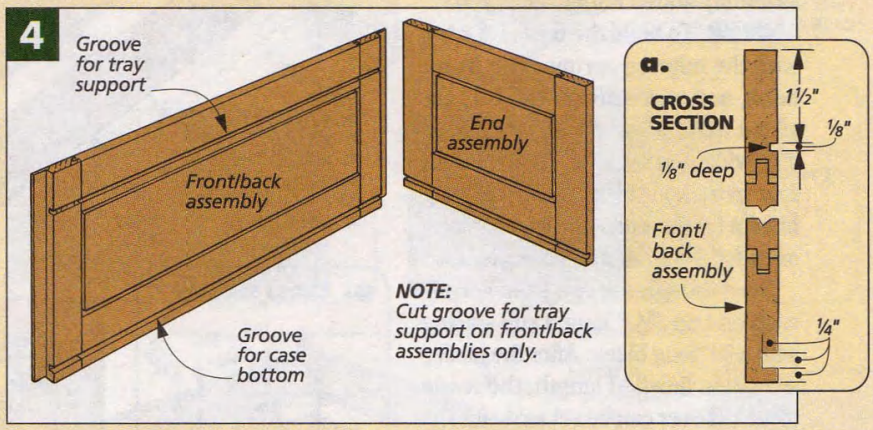

With the bottom cut to size, the next step is to cut a rabbet on the bottom edges of the panel. This forms a tongue that fits the grooves in the case, see Fig. 5a. Again, you want the panel to be able to expand, but there's no need for a shadowline here, so I only allowed a for a 1/16" gap between the bottom shoulder of the rabbet and the sides of the case, see Fig. 5a.

CASE ASSEMBLY. Now the case can be dry assembled to check the fit of the bottom panel. This is also a good time to check the squareness of the case. This is especially important because the base and lid aprons are fitted around the case with miter joints. And if the case isn't square, getting your miters to fit tight will be quite a bit more work than it needs to be.

When the case has been glued together, there's just one thing left to do. Rout a stopped chamfer along each corner, stopping it 1" from the top and bottom of the case, see Fig. 6. (To do this, you'll want to lay the case on its side.)

The important thing here is to get the *depth* of the chamfer set correctly. The bit should cut right to the joint line between the front/back and end assemblies, see Fig. 6a.

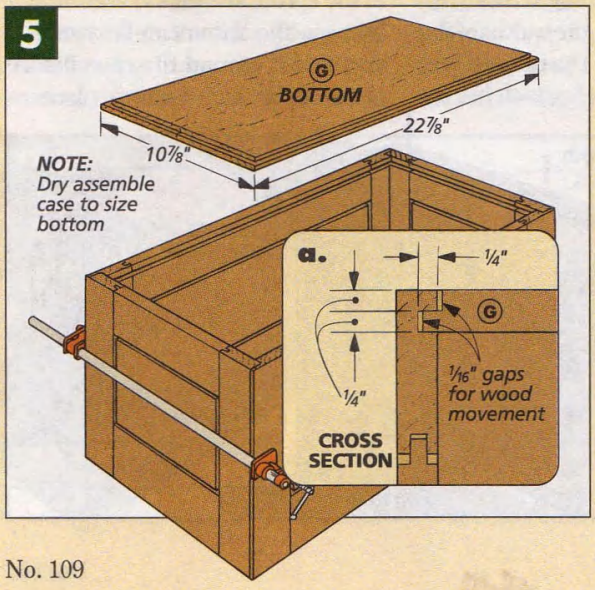

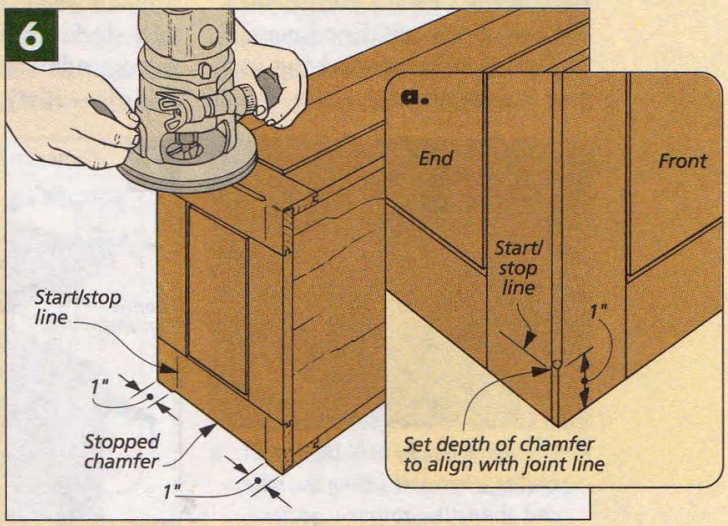

Base

With the case completed, I began work on the base that it sits on. This base does more than just support the case; it also holds a wide storage drawer for chisels and other tools.

There are two parts to the base, see drawing at right. First, there's a mitered apron built to fit around the case. Then there's a frame and panel assembly added under the apron.

APRONS. To build the base, I started with the mitered aprons. The **front, back, and end aprons (H, I, J)** are all cut from 1/2" stock and are ripped 2 3/8" wide, see detail 'a'. I started with four extra-long blanks: two 14" long blanks for the ends and two 26" long ones for the front and back pieces.

Even though the two front aprons each end up 2 3/16" long, I still started with a 26" long blank. After the pieces are cut to finished length, the waste piece left over can be set aside for the drawer's false front.

After the aprons are roughed out, I rabbeted their top edges to wrap around the bottom edge of the case, see detail 'a'. Then I routed a chamfer on the front corner of each. (There should be a 1/16" shoulder left on the top of each apron blank.)

Now the aprons can be mitered to final size. To do this, I flipped the case upside down and used it as a form to "wrap" the apron around. But with just a 5/16"-wide rabbet, the pieces won't stand by themselves. So I used a corner block to help hold the pieces in place, see photo below.

Now the aprons can be assembled. Here again, I used a corner block. (Be sure to trim off the corner so it isn't glued to the aprons.) But don't glue the aprons to the case — just apply glue to the mitered edges. Then remove the assembly from the case once everything is clamped up.

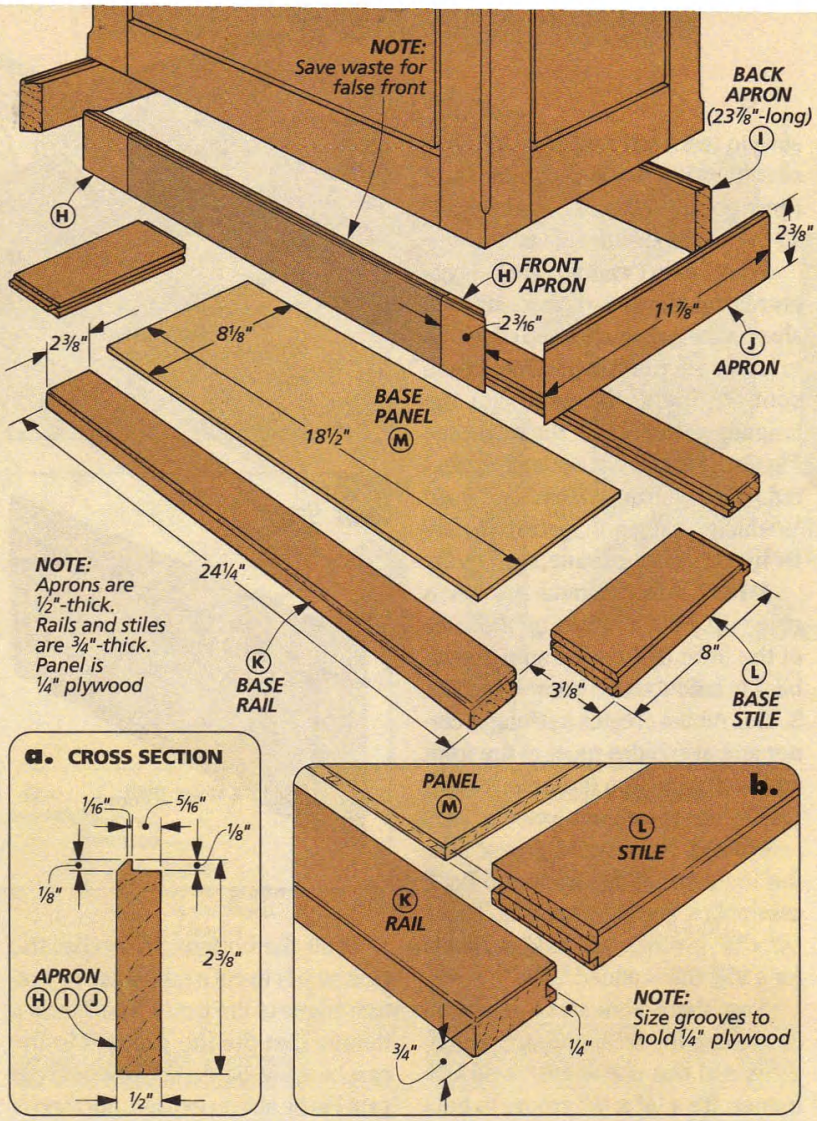

BASE FRAME. To complete the base, I added a frame and panel, see drawing. This frame overhangs the aprons 3/16" on each side, and it's built much like the frame and panels on the case. But there are some important differences.

First, for added strength I used 3/4"-thick stock. Second, the widths of the pieces are different. The **rails (K)** are 2 3/8" wide so the joint line matches the joint line in the case above. The **stiles (L)** are 3 1/8" so they will be wide enough for the drawer to rest on.

And finally, to strengthen the frame, I used a 1/4" plywood **panel (M)** to tie it all together, see detail 'b.'

After the base frame was glued up, I routed a 1/8" chamfer on the top and bottom edges and screwed the base to the apron, see Figs. 7 and 7a. But because the apron can flex some, I clamped it around the case before screwing the base frame in place.

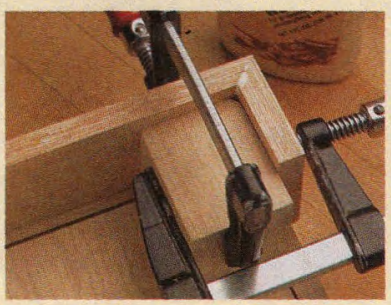

▲ *Clamping blocks hold the corners square when test-fitting the miters and gluing the aprons together.*

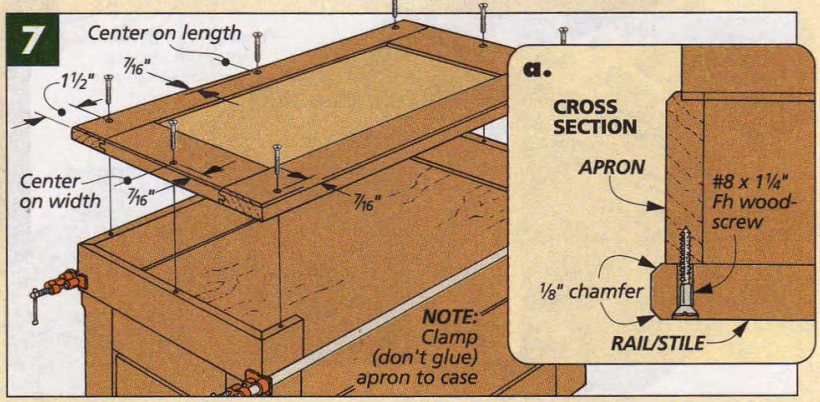

Drawer

Before attaching the base to the case, I built the drawer, see drawing at right. This way when it was time to fit the drawer, I had access from the top, instead of just the front.

DRAWER. To build the drawer, I began by cutting the **front, back (N)** and **sides (O)** to size from 1/2" stock, see Fig. 8. I sized these pieces so that when the drawer was built, there would be a 1/16" gap at the top and sides of the drawer opening in front. And I also left a 1/2" space in back of the drawer for a stop.

With the pieces cut to size, I cut 1/8" dadoes on the sides and mating tongues on the front and back pieces, see Fig. 8a. Then I cut a groove near the bottom of each piece for the 1/4"-thick plywood bottom, see Fig. 8b.

After the plywood **bottom (P)** has been cut to fit in the grooves, the drawer can be glued together.

FALSE FRONT. Now, I began work on the **false front (Q)**, using the blank left over from the front aprons, refer to drawing at left. First, I cut the blank to fit the opening so there was a 1/32" gap at each end, see Fig. 8. (Mine was 19 7/16" long.)

Next, the rabbet on top of the false front needs to be cut a little deeper so it won't hit the case when the drawer is shut, see Fig. 8b. (I sized the rabbet so the shoulder matched the height of the drawer.)

All that's left now to complete the false front is to cut the recesses for the flush ring drawer pulls, see the photo below right and the step-by-step instructions on page 19.

GUIDES. With the false front complete, I set the drawer in the base and screwed the false front to it, see drawing above. Then I added two drawer **guides (R)**. These are cut to fill the gaps between the drawer and the sides of the base and are screwed in place, see details 'a' and 'b' in drawing.

STOP. Next, I screwed a 1/2" x 1/2" **stop (S)** to the base behind the drawer, see drawing. This does more than just stop the drawer. I also added a ball catch to the stop and drawer so the drawer wouldn't slide open when the chest is being carried, see Fig. 9.

At this point, the base can be glued to the case. To do this, I applied glue to the rabbets in the base and simply set the case on top of the base.

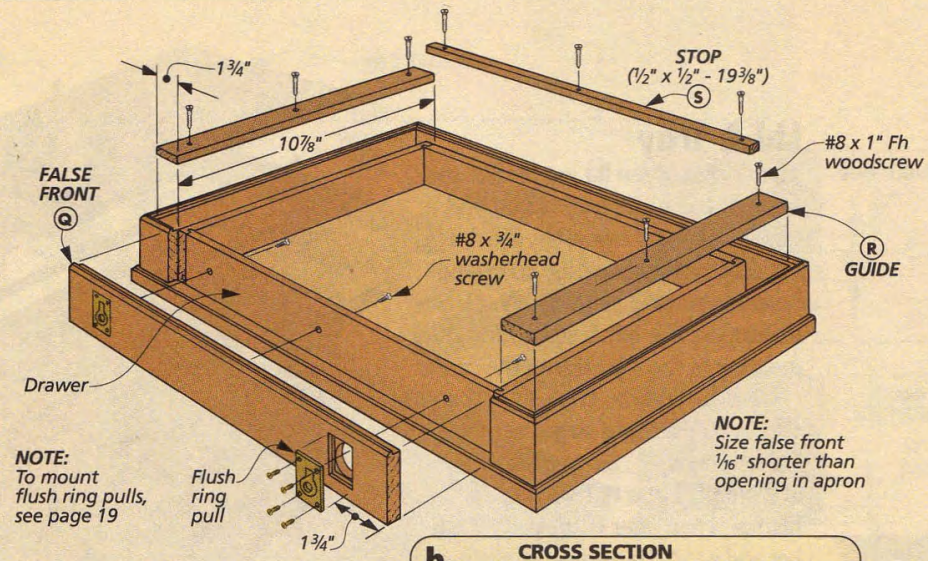

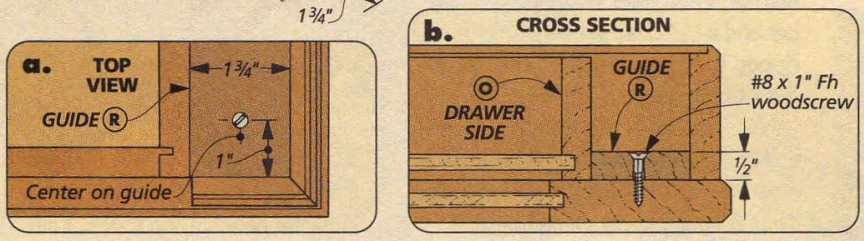

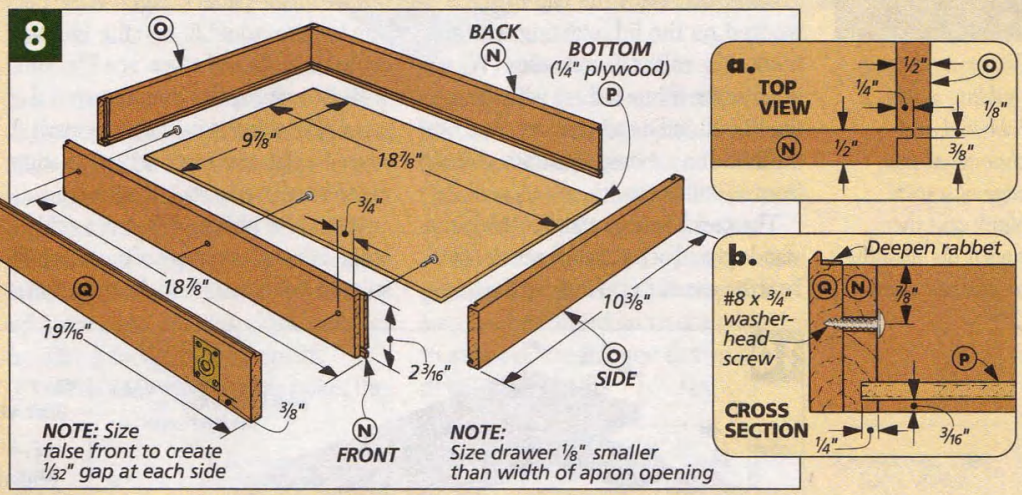

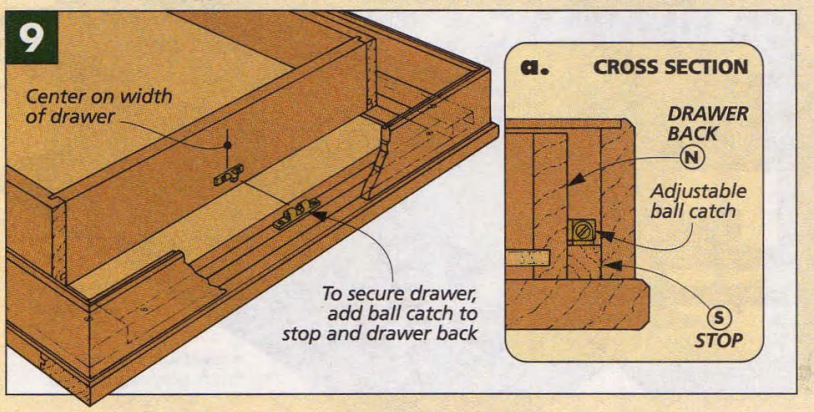

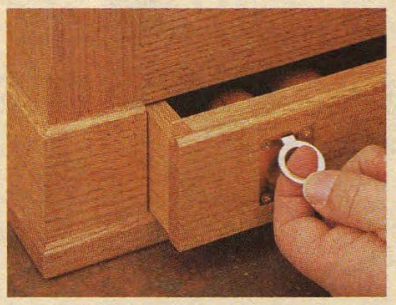

▲ *The recess for this pull gets cut before the false front is attached to the drawer, see page 19.*

Lid & Tray

The design of the lid is a lot like the base. It has a mitered apron and a frame and panel assembly, see drawing. And like the base, the lid extends beyond the case just a bit (3/16"). So to support the lid, first I added cap molding to the top edge of the case.

CAP MOLDING. The **caps (T, U)** are 11/16" x 3/8" molding strips, see drawing and detail 'b'. Since these pieces are small, I started with oversize blanks. Then after cutting a 1/2" rabbet and a 1/8" chamfer on one edge, I ripped the caps to the correct thickness (width), see margin photo.

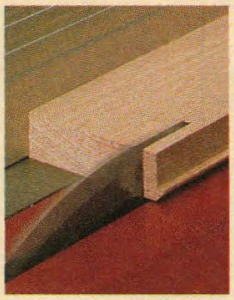

▲ *To create the cap molding safely, I rabbeted and chamfered one edge of a wide blank and then ripped the molding to finished size.*

Now the caps can be mitered to fit flush with the inside edges of the case, see drawing and detail 'b' at right. Then they're simply glued in place.

LID FRAME. With the cap in place, I worked on the lid, starting with the frame. The **rails (V)** and **stiles (W)** are sized so the frame is flush with the cap, see Fig. 10 and detail 'a' above. And like the frame on the base, this frame is built from 3/4"-thick stock.

The panel here is also 3/4" thick and stands proud of the frame, see detail 'a'. I cut the **panel (X)** to overlap the frame 3/16" on each side. Then to capture the panel in the frame, I cut a groove on the panel's edges so the bottom tongue would fit into the grooves cut in the rails and stiles, see Fig. 10b.

Before gluing the frame around the panel (the panel shouldn't be glued), I routed a chamfer around the top edge of the panel, see detail 'a' above.

When the glue is dry, cut a rabbet around the bottom edge of the rails and stiles to hold the 1/2"-thick apron that's added next, see Fig. 11. Then all that's left is to rout a 1/8" chamfer around the top edge of the frame, see Fig. 12.

LID APRON. With the frame and panel complete, I added an apron below it to make the lid a little deeper, see Fig. 13. A deeper lid provides clearance for tools stored in the sliding tray (and can be used to store hand saws, see page 19).

Except for the fact that the lid's **aprons (Y, Z)** are only 1 3/4" wide, they're made and attached just like the

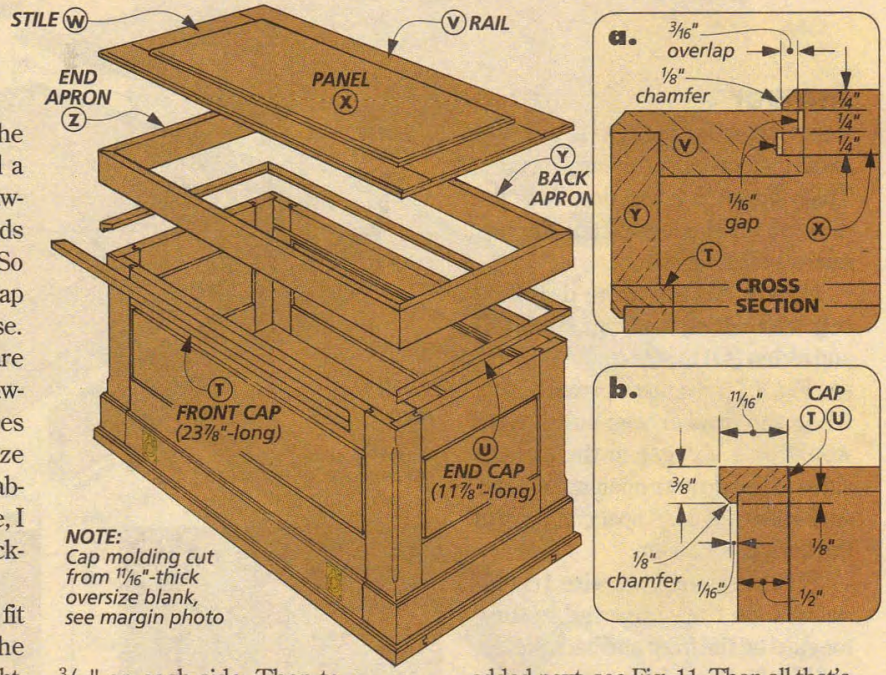

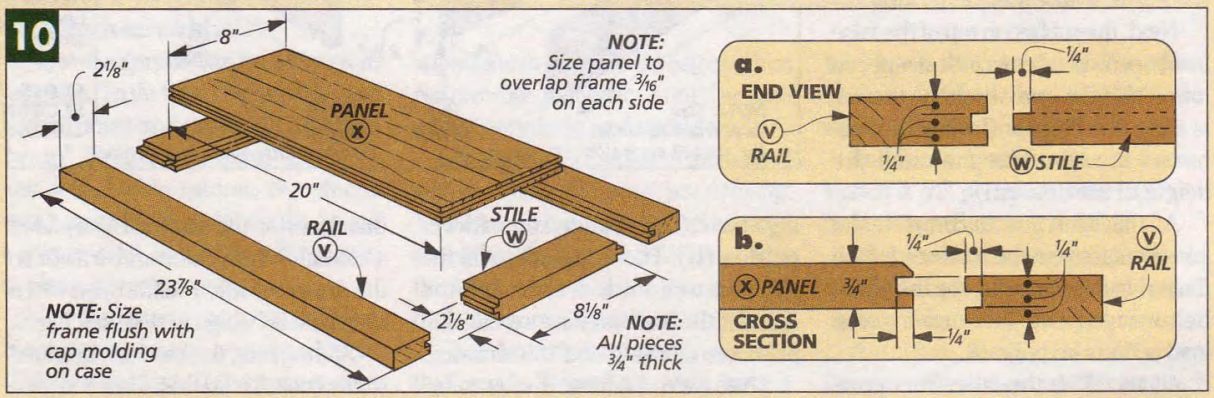

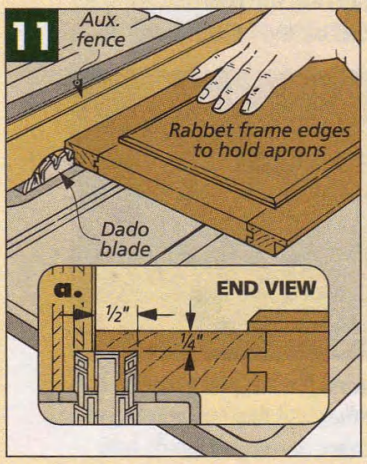

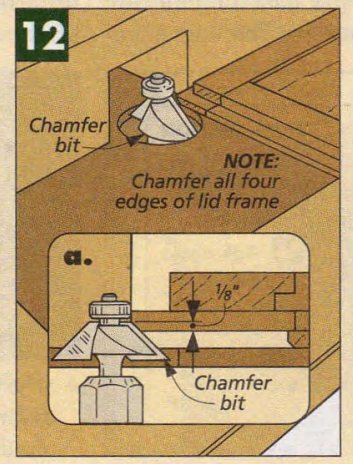

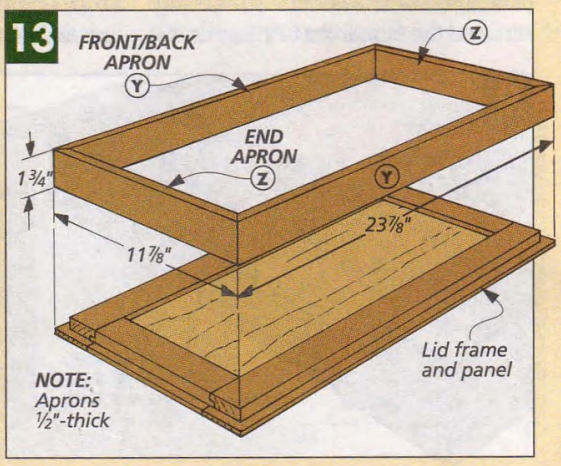

aprons on the base, see Fig. 13. I even used the same clamping block, refer to the photo on page 24.

SLIDING TRAY. With the lid complete, I built a sliding tray next, see Fig. 14. I sized it 1/8" narrower than the case opening and built it with the same tongue and groove joint I used on the drawer. But this time, the grooves for the bottom will be exposed on the ends, so you'll need to plug them.

TRAY SUPPORT. Of course, the tray needs something inside the case to support it. So I added the **tray supports (BB)** next, see Fig. 14.

Like the cap molding on the case, the supports are cut from an extra wide blank (1/2" thick). First, I rabbeted one edge to create a tongue that fit into the grooves cut in the case's front and back assemblies, see Fig. 14c. Then I ripped the supports from the blank.

After the supports are cut to final length, I glued them in place and softened the edges with sandpaper.

HARDWARE. With the sliding tray complete, I mounted the lid to the case with 2" x 1" brass hinges, mortising the hinge into both the lid and the case, see details 'b' and 'c' in drawing below. This requires some careful work because the lid and the case should end up flush.

With the lid mounted, the last step is to add the lock. The lock I chose has an alignment pin to keep the lid and case aligned. But I didn't want this pin near the top on the case where I could bang a tool on it. So I mortised the lock into the lid, which requires a 3/8"-thick **lock backing (AA)** on the inside edge of the lid apron, see drawing. For more on mounting the lock, see page 28.

FINISH & HARDWARE. At this point, the chest can be sanded and finished. But it's best to remove the pulls and lock first. I used Benjamin Moore's Golden Oak to stain the chest and then wiped on a couple coats of an oil finish.

When the finish is dry, replace the pulls and lock. Then you can add a handle at each end and a chain inside to support the lid, see drawing and detail 'a' below.

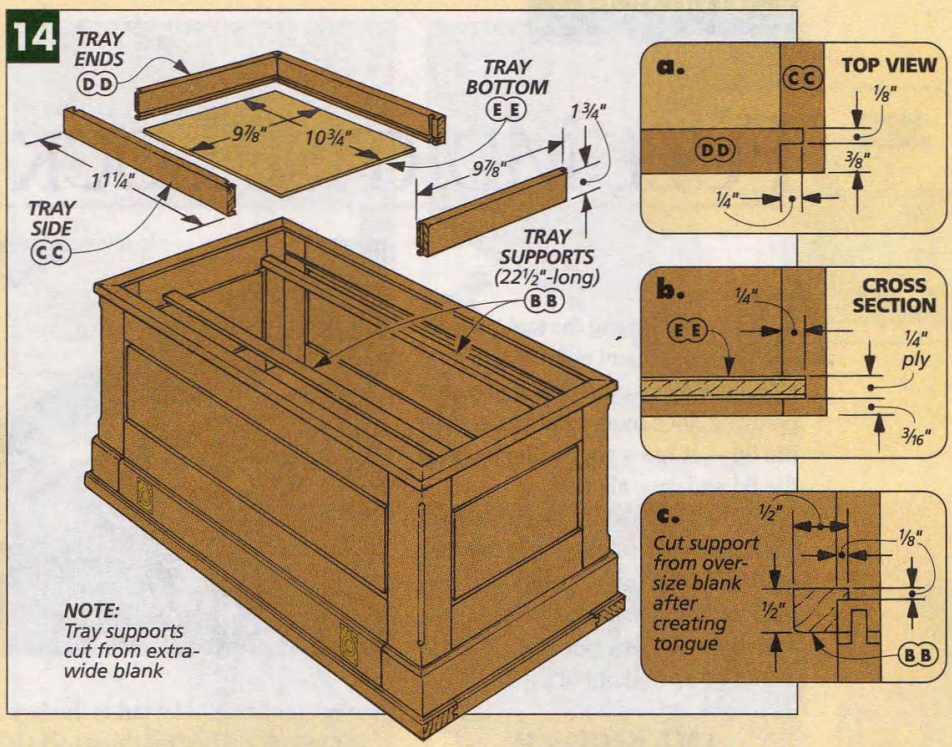

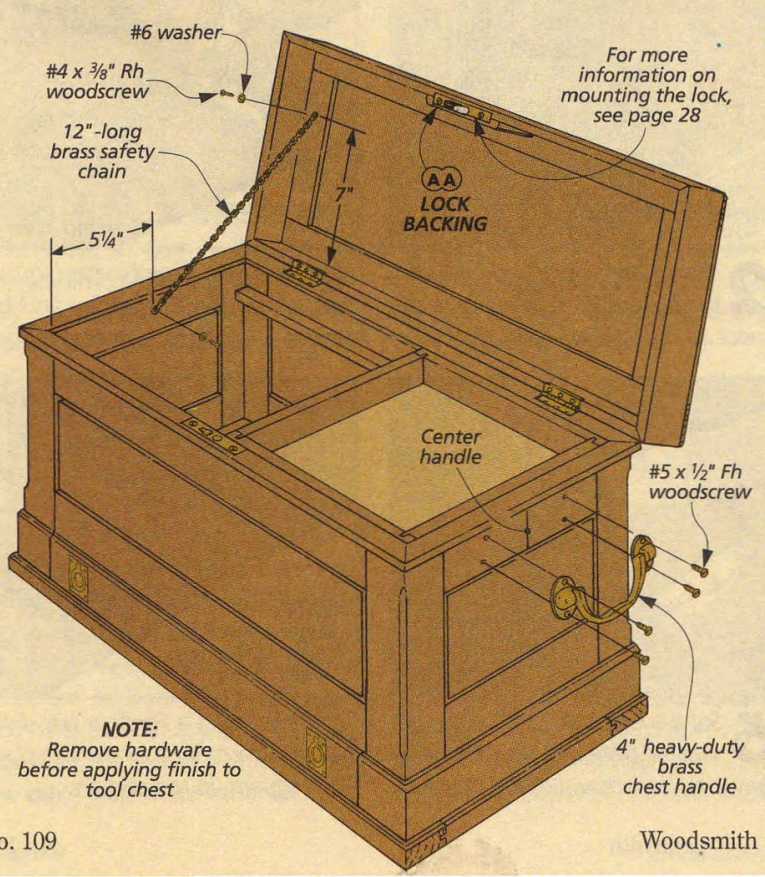

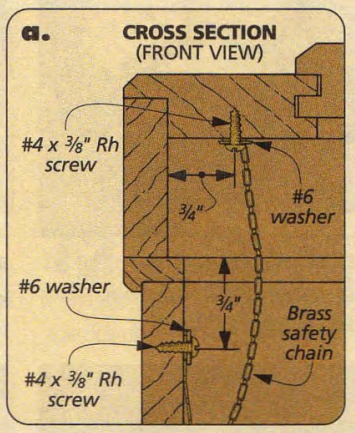

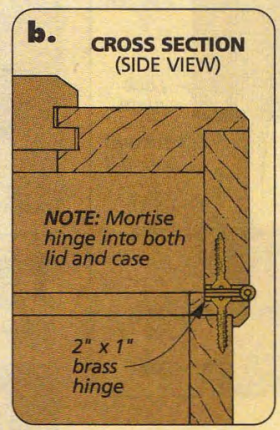

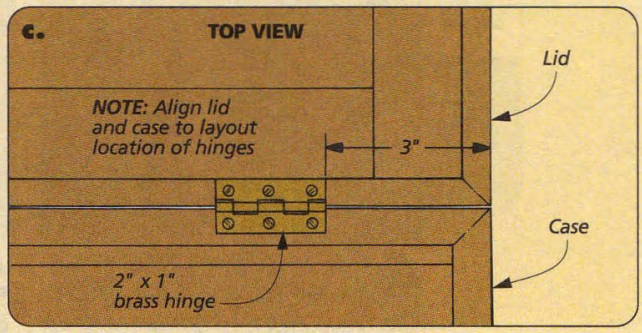

FULL MORTISE LOCK

As I was designing the tool chest on page 20, I spent quite a bit of time looking at locks. And the one I ended up using does more than just secure the lid — it has a pin that helps keep the lid and case aligned.

Of course, I didn't want this steel alignment pin near the top of the case where I could bang a tool on it, so I mounted the lock in the lid. That way, when the lid was opened, this pin would be up and out of the way.

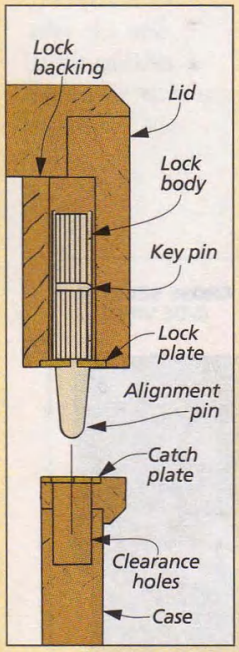

LOCK MECHANISM

I'll admit that drilling into a nearly completed project can be a bit nerve-racking. But the task is pretty straightforward — a pair of mortises is cut in the lid for the lock, and another pair is cut in the case for the catch plate. The trick is getting the two parts to line up, and careful layout is the key.

LAY OUT LOCK. The first thing to do is lay out the lock mechanism, see Step 1. It's not centered side-to-side, as you might expect. What you want centered is the key hole that's drilled on the front of the chest later (Step 8). So to position the lock correctly now, it's the key pin that needs to be centered.

With the lock positioned side-to-side, next I laid it out on the thickness of the lid. Most times, a lock is just centered, but not here — the lock and catch plate wouldn't align. That's because the workpieces are different thicknesses and flush only along their front edges, see drawing in margin.

To get around this, first I added a

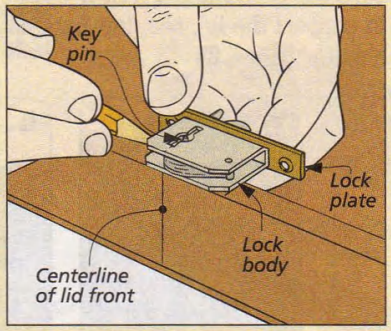

1 *First, draw a centerline on the lid. Then center the key pin and mark the sides of the lock body.*

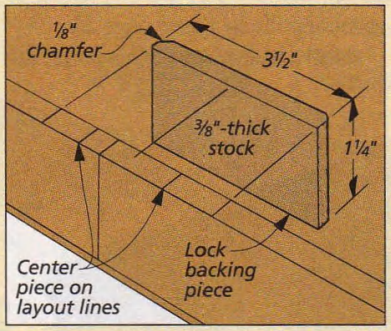

2 *Next, center a lock backing along the lay out lines. Then glue the piece to the inside face of the lid.*

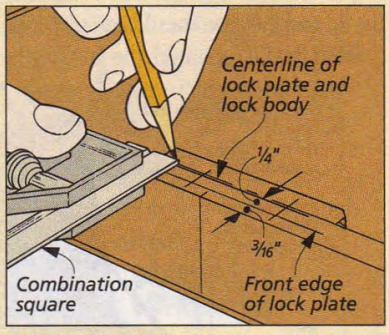

3 *Now using a combination square, lay out the front edge and the centerline of the lock plate and body.*

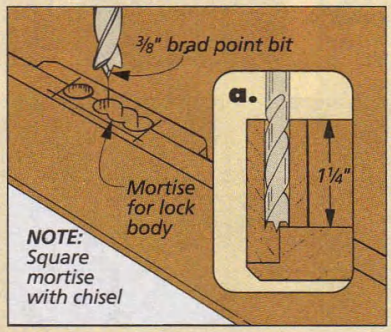

4 *With a brad point bit chucked in the drill press, drill the mortise. Then square up the sides with a chisel.*

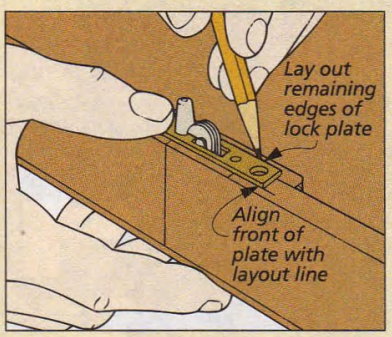

5 *Set the lock in the mortise (make sure the plate lines up with the lay out line). Then draw around the plate.*

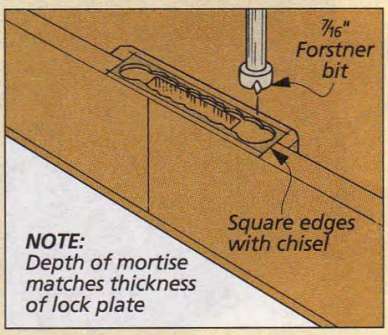

6 *Now using a Forstner bit, drill a shallow mortise for the lock plate. Then square up the corners.*

backing piece inside the apron, see Step 2. Then instead of laying out the lock mechanism first, I marked the front edge of the lock *plate* with a combination square, see Step 3. (This will also be used later to lay out the catch plate, see step 11.) Now, laying out the center of the lock body is just a matter of drawing a second line.

DRILL MORTISES. With the lock body laid out, the mortise can be drilled and squared up, see Step 4. But don't bother trying to get a tight fit. In fact, I found it helpful to have a little "play," so I could make sure the lock plate lined up with the layout line when tracing around it, see Step 5.

When the lock plate was mortised into the lid (Step 6), I drilled a couple clearance holes for the "dimples" on the bottom side of the plate, see Step 7. These dimples are created by the countersunk screw holes in the plate.

ADD ESCUTCHEON. Now it's time to create the key hole, see Step 8. I added a small brass escutcheon so the key wouldn't wear on the hole. Just keep in mind that the larger hole should be on top when the lid is right side up.

When drilling the holes, I prevented chipout by inserting a backing piece into the lock mortise, see Step 8. Then to get the escutcheon to fit, I simply filed it to shape, see Step 9.

CATCH PLATE

Adding the catch plate is similar to mounting the lock. To get the catch plate to line up with the lock, first the hole for the alignment pin is centered side-to-side, see Step 11. (On this lock, the alignment pin is in line with the key pin, refer to Step 8a.) Then the front edge of the plate can be laid out with the combination square.

PLATE MORTISE. Next, I drew around the plate and cut its mortise, see Steps 11 and 12. Just make sure the openings in the catch plate line up with the pin and hook on the lock. (It's easy to get the plate turned around.)

CLEARANCE HOLES. Now with the plate set in place, the clearance holes can be traced, see Step 13. I drilled one "mortise" for both the pin and hook, see Step 14. Then finally, I drilled holes for the dimples and screwed the catch plate to the case. W

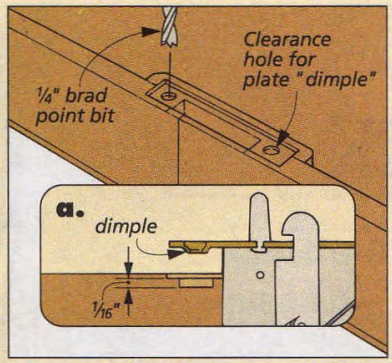

7 *Since there are "dimples" under the screw holes, I drilled clearance holes to get the plate to fit flush.*

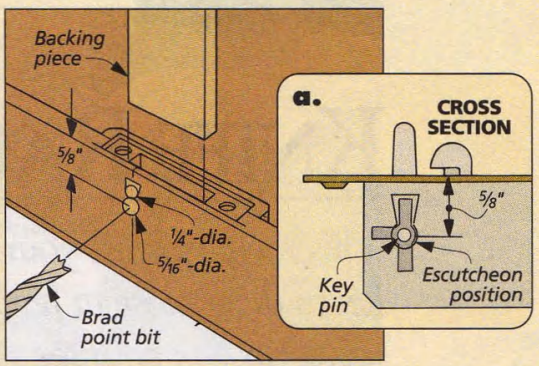

8 *Mark the position of the key pin on the lid. Then trace around the escutcheon and drill pilot holes.*

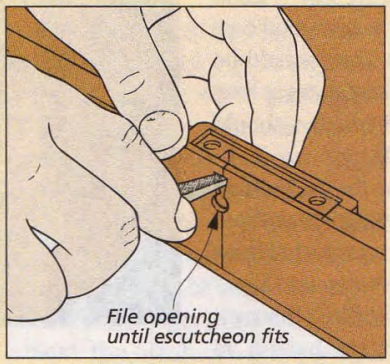

9 *Now using a chisel and small file, shape the two holes until the escutcheon fits, see tip in margin.*

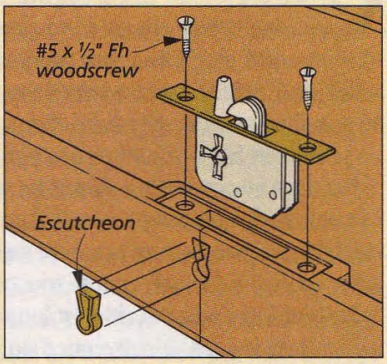

10 *At this point, the escutcheon can be pressed into its hole, and the lock can be screwed in place.*

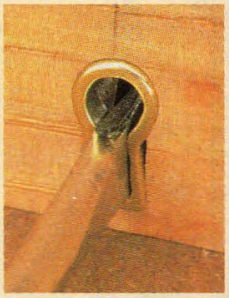

▲ *To fill any slight gaps, press the escutcheon out with a screwdriver.*

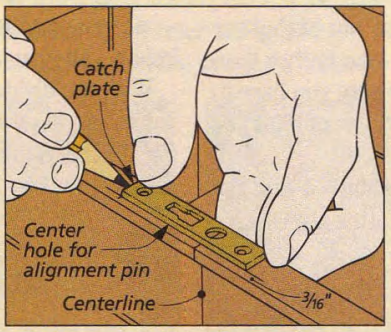

11 *To lay out the catch plate, mark its front edge on the case. Then center the alignment pin hole and trace around the plate.*

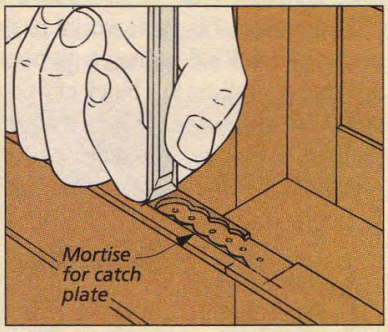

12 *Now drill the mortise for the catch plate and square up the corners. Then drill clearance holes for the "dimples" under the catch plate.*

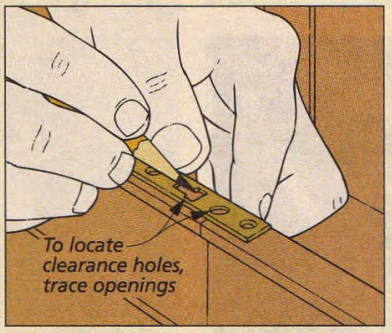

13 *Next, set the catch plate in the mortise and trace the openings for the alignment pin and hook.*

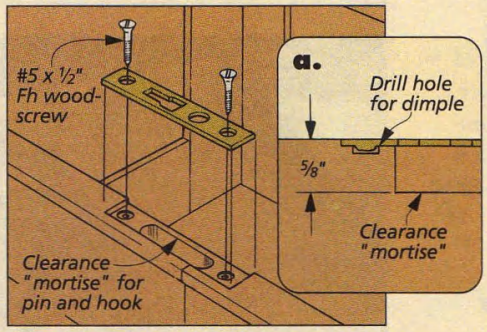

14 *Drill a 5/8"-deep clearance mortise and holes for dimples. Then screw the catch plate into place.*

KNIFE RACK

This rack protects your knives and keeps them close at hand – without using up any counter space.

Kitchen knives are like woodworking chisels — good ones don't come cheap, so you want to take good care of them. And since they get used a lot, they should be within easy reach. You also want them to stay sharp as long as possible, so wherever they end up, the blades should be protected from other kitchen utensils.

I've seen woodworking chisels hung on the wall behind a bench, just within arm's reach. And I've also seen them stored in a separate drawer where they're protected from other tools (as they are on the tool chest on page 20).

Both of these woodworking solutions inspired this rack for kitchen knives. It's designed so you can hang it on the wall or set it in a drawer. In either place, your knives can be kept close at hand without taking up any counter space. And they're protected from the can opener and meat tenderizer, too, see the photo below.

The reason this rack works in these out-of-the-way places is that it's designed with open slots. Rather than burying the knives in a block of wood where you have to pull them straight out, this rack allows you to pull (or lift) the knife away from the rack.

DIVIDERS. To begin work on the rack, I started with the **dividers (A)**, cutting 1 1/16"-thick hard maple into oversize blanks (2 3/8" x 11"), refer to Fig. 1a. Note: This knife rack is designed to hold knives with blades up to 2" wide and 10" long. Mine holds six knives, but customizing it is easy — all you need is one more divider than the number of knives you plan to hold in it.

With the divider blanks roughed out, the next thing I did was to taper them slightly along the front edge, see Fig. 1. This reduces the weight of the rack a little, but it also makes the dividers look a little more graceful.

When placed inside a drawer, this block will protect your knives from other utensils.

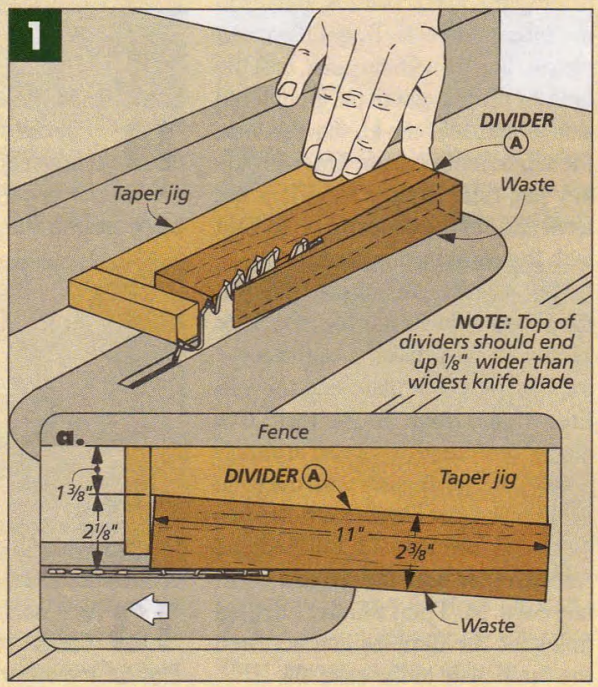

To taper the dividers, I used the table saw and a shop-made jig, see the drawing on page 30 and Fig. 1.

The thing to keep in mind is that you want the top of each divider to end up wide enough to hold your widest knife. (It should be at least 1/8" wider.) I wanted the rack to be able to hold a 2"-wide knife, so when setting the rip fence on the table saw, I made sure the dividers tapered to 2 1/8" at the top, see Fig. 1a.

With the tapers cut on the dividers, the next step is to cut a 1/8"-deep rabbet in each divider, see Fig. 2. This creates a recess to hold the lip pieces that are added later.

To cut the rabbets, I used a dado blade on the table saw with an auxiliary fence to back up the cut. (Just make sure it's long enough to extend past the blade to reduce the chance of chipout.) Because this cut doesn't go all the way through the divider, I was able to use the rip fence as a stop. This way, all the rabbets are exactly the same length (3/4"), see Fig. 2a.

LIP PIECES. Once the rabbets are cut, I worked on the **lip (B)** pieces, see drawing in margin at right. They help the knives slide in place.

But the lip pieces are pretty small to work with safely. So I did most of the work on a single, 1/2"-thick blank oversized in both width and length (2" x 12"), see Fig. 3. Then later, I cut the individual pieces from the blank like slicing bread from a loaf.

The first thing to do to the blank is rout a 45° chamfer along one edge of the blank with the bit set to leave a 1/8" shoulder, see Figs. 3 and 3a.

Next, the blank can be ripped to final width, see Figs. 4 and 4a. The important thing here is that the inside face of the lip blank matches the width of the rabbets cut earlier in the dividers (3/4"), refer to Fig. 2a.

To complete the lip blank, I routed a second chamfer on the corner opposite the first, see Fig. 5. Here, I wanted the shoulder left by the chamfer to match the depth of the rabbet in the dividers (1/8"), see Fig. 5a.

At this point, the lip pieces can be sliced from the blank to match the thickness of the dividers (1 1/16"), see Fig. 6. Then they can be glued in place. The lip pieces are small enough that instead of messing with clamps, I just held each piece until the glue set.

Finally, to make it as easy as possible to slide the knives in place, I routed a 1/16" chamfer around the front and top edges of each divider, see Fig. 6 and margin drawing at left.

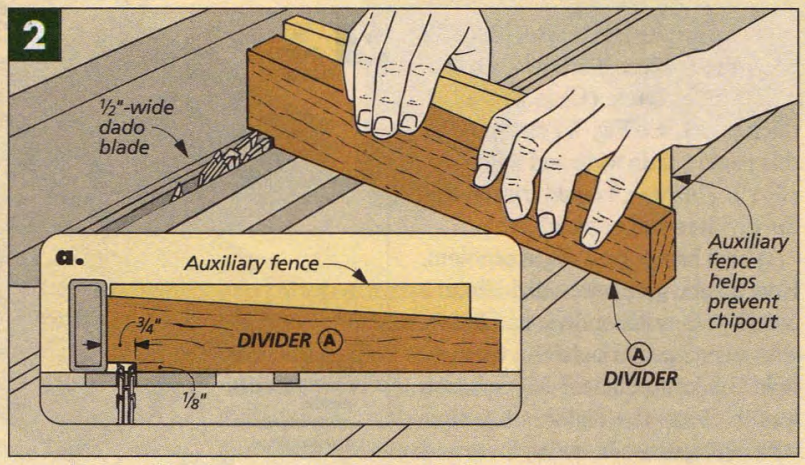

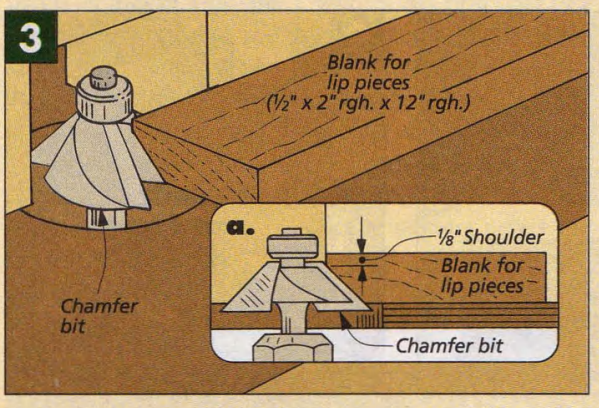

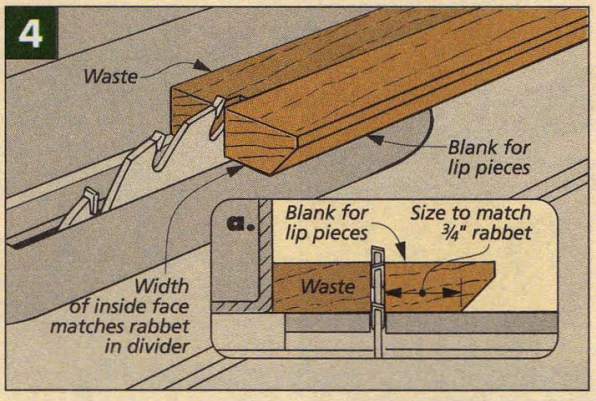

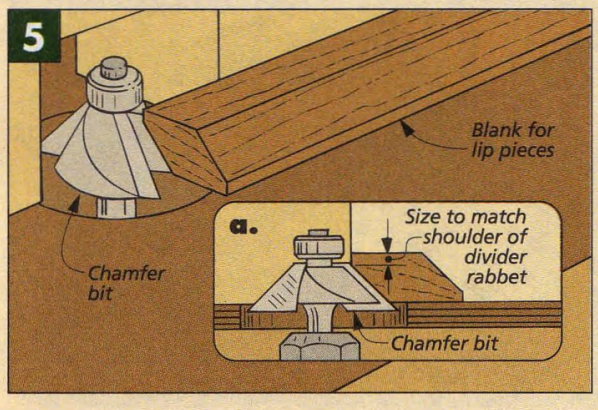

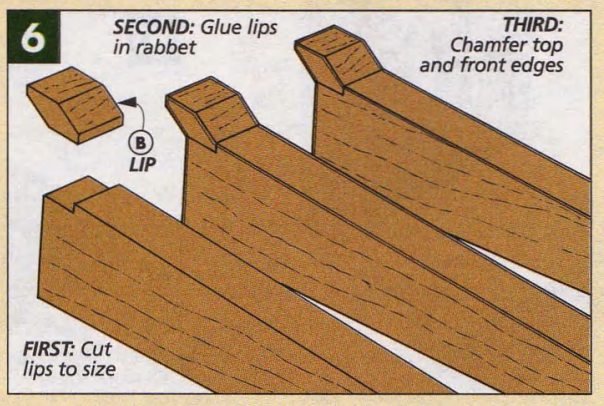

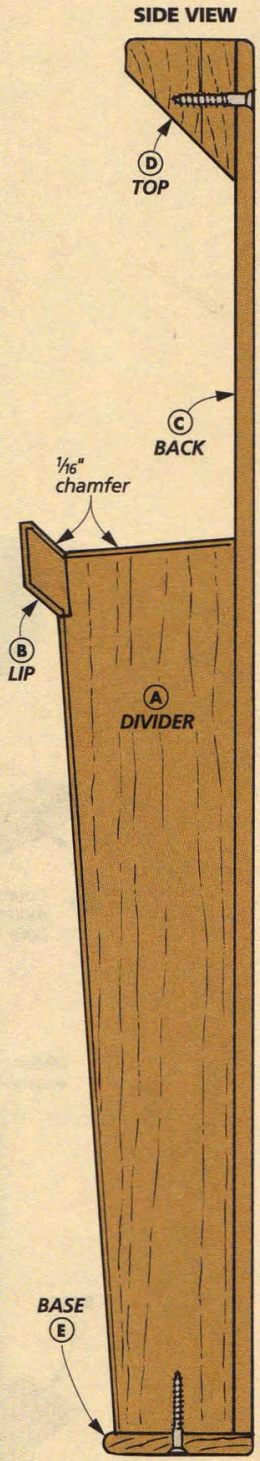

With the dividers complete, I added a back, top, and base, see drawing below.

BACK. The **back (C)** is just a 1/4"-thick panel, see Fig. 7. I started with this panel a little wide and long (9" x 16 3/4"). This way, I could trim it after the dividers had been added.

Which brings up a slight problem. How do you glue seven dividers to a panel so they all end up parallel — with even spaces between them to hold the knife blades? My solution was to clamp the dividers together with 3/16" spacers between them and then glue them to the back panel as a single unit, see Fig. 7.

Also, I clamped a temporary block 5 3/4" down from the top. Then with something to butt the assembly against, I glued the dividers flush with one edge of the back panel.

With the dividers glued to the back panel, I trimmed the assembly to final length (16 1/4") and width, see Fig. 7a. (My rack ended up 8 9/16" wide.)

TOP. Now, a beveled **top (D)** can be added. Like the lips on the dividers, it helps hold the knives in place.

To make the top, I glued two 3/4"-thick pieces together and ripped them 1 1/4" thick. Then I cut them to length to match the width of the rack (8 9/16") and beveled one edge, see Fig. 8.

Next, I rounded over the top front edge, see Fig. 9. And after screwing the top (D) to the back, I rounded the top edge of the back, see Fig. 10.

BASE. To cover the ends of the dividers, I added a 1/4"-thick **base (E)**, see Fig. 10. It stands 1/8" proud of the dividers. (Mine was 1 3/4" wide.) Then after rounding over three edges, the base is glued and screwed to the rack.

Finally, I wiped on a couple coats of an oil finish and screwed the rack to the wall, see drawing at left.

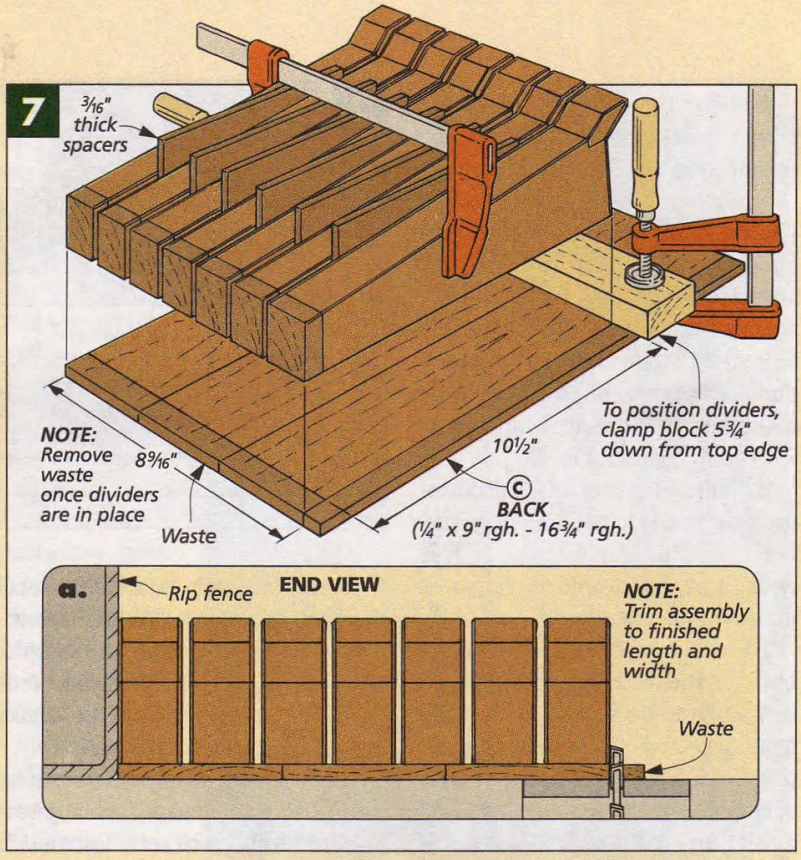

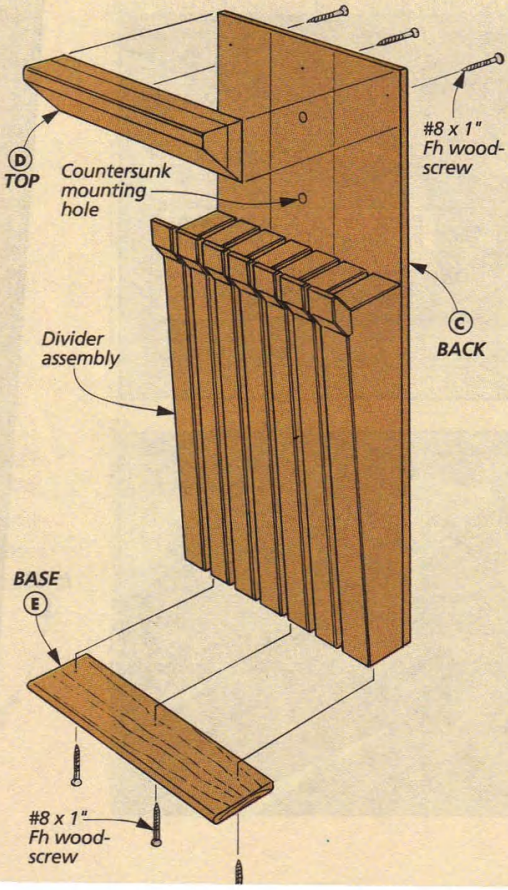

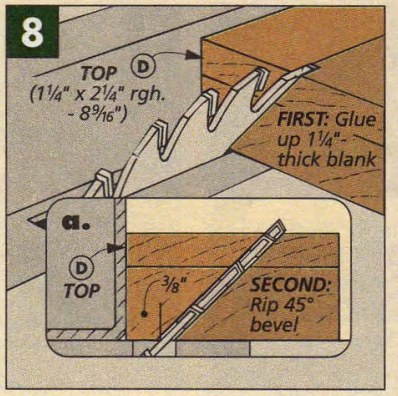

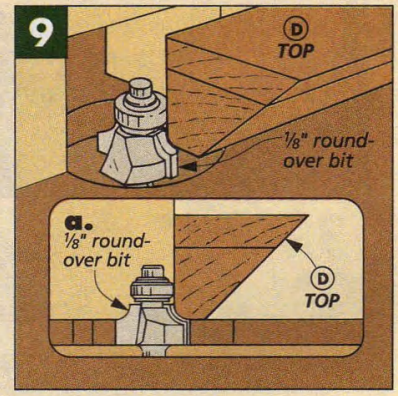

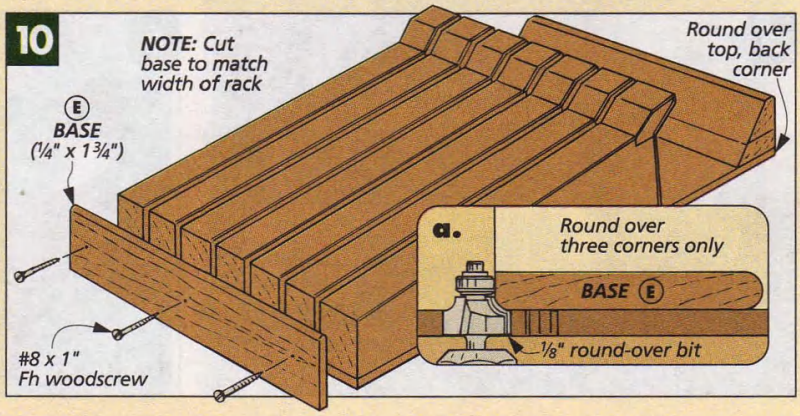

TALKING SHOP

Contact Cement

I've heard quite a few horror stories from woodworkers about the first time they tried using contact cement. They typically involve having to rip off a whole sheet of plastic laminate or expensive veneer that was set down crooked.

Despite these mishaps, using contact cement does not have to be a terrifying experience. As long as you keep a few points in mind.

HOW IT WORKS. If you've never used contact cement, there are a couple things you should know about this adhesive. Contact cement works by sticking to itself. So it has to be applied to both surfaces being joined.

And like the name implies, contact cement bonds on contact. Once the two adhesive-coated surfaces touch each other, you'll have a bear of a time trying to get them apart without ruining one or both of them. So it's important not to rush the process.

USING CONTACT CEMENT. The first thing to consider when using contact cement is safety, see box below right.

After taking the necessary safety precautions, the next step is to apply the adhesive to the workpieces. To do this, I use a disposable brush or roller because contact cement is difficult to clean out of a brush, see box below.

Whether you use a brush or a roller, it's important to lay the contact cement down with only one or two strokes. That's because if you continue to brush over the same area, the contact cement starts sticking to itself and balls up.

TWO COATS. The first coat of contact cement will soak into the surface of the workpieces, so I usually apply two coats. Just make sure you let the first coat dry before applying the second one. Otherwise you'll have a hard time spreading the second coat on smoothly.

The most common mistake is joining the two pieces together before the second coat has dried. Check the contact cement by feel. It should be slightly tacky, but it shouldn't stick to your fingers. (It will also look dull.)

JOINING THE PIECES. Joining the two pieces is the critical part of the operation, especially with a large project like the computer desk.

In order to position the laminate over the desk, I placed several narrow strips of wood between the two pieces, see photo above. Then after positioning the laminate, I pulled the sticks at one by one, starting at the center.

To make sure the two surfaces are tightly bonded, I go over them with a J-roller. The roller allows me to concentrate a lot of pressure on a small area.

But if you don't have a roller, you can use a hammer and a block of wood. Just move the block around the surface of the top, tapping on it to press the two pieces together. W

SAFETY FIRST

Most contact cements contain vapors that are highly flammable and potentially harmful to your health. So I take safety precautions seriously.

To start with, I only use contact cement outdoors or in a well-ventilated area. And I never use it in the presence of an open flame (like a gas water heater or furnace, for instance). Since the vapors are heavier than air, make sure they don't travel down air vents and collect at a lower level of the house (like a basement) where they might ignite.

Finally, to protect myself from the vapors, I wear a respirator. Most respirators designed for paint mist or organic vapors also provide protection against contact cement vapors.

CONTACT CEMENT TOOLS

Like any job, it helps to have the right tools when working with contact cement. To start with, you'll need a disposable metal container to hold the cement. (The solvents in contact cement will dissolve most plastic containers.)

For small projects, I use foam brushes for applying the contact cement. (Disposable bristle brushes tend to fall apart.) But for large surfaces like the computer desk, I use a disposable 3" trim roller. Then to roll out the air bubbles, I use a "J-roller," see photo.

Finally, I always keep a can of contact cement thinner on hand for clean up. It can also be used (if you're careful) to separate the two pieces in case of a mishap.

FEATHERBOARD JIG

Featherboards are great for holding stock against the fence of a saw, jointer, or router table to prevent kickback. And a jig sent in by **James Clark** of Dayton, Ohio allows you to make featherboards quickly and easily.

The jig rides in the miter gauge slot of your table saw, holding the featherboard blank at an angle. This allows you to cut a series of kerfs to create the "fingers" of the featherboard.

THE JIG. There's not much to building the jig. Just start by cutting a base, runner, index key, and fence to finished size, see drawing below.

KERFS. There are two kerfs in the base of the jig; one for the index key and one for the saw blade. The spacing between these kerfs (1/8") determines the width of the "fingers."

Set your rip fence 8" away from the blade and cut a 2"-long kerf for the index key, see Fig. 1. After gluing the index key into the kerf, move the fence another 1/4" away from the blade and cut the second kerf, see Fig. 2.

Now, without moving the rip fence, glue the runner to the bottom of the base, making sure the base is tight against the fence, see Fig. 3. This will ensure that the kerf in the jig will always line up with the blade.

Once the glue has set up, secure the runner with some screws. Then attach the fence at a 30° angle to complete the jig, see drawing and Fig. 4.

USING THE JIG. To make a featherboard, simply bevel the ends of your blank at 30°. Then clamp a stop block to your rip fence to control the length of the featherboard fingers, see photo.

With one side of the blank placed against the index key, cut a kerf. Now just continue cutting kerfs along the edge of the blank, placing each newly-cut kerf over the index key before cutting the next one, see photo.

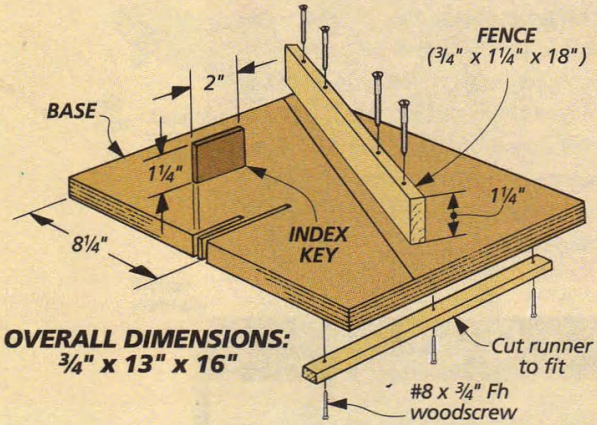

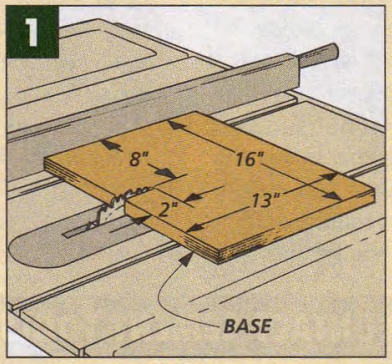

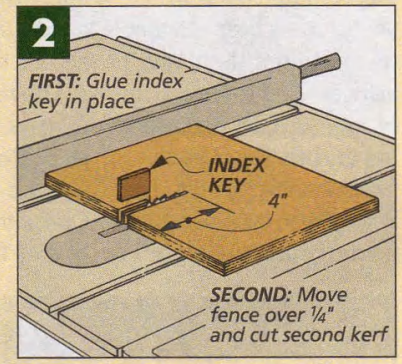

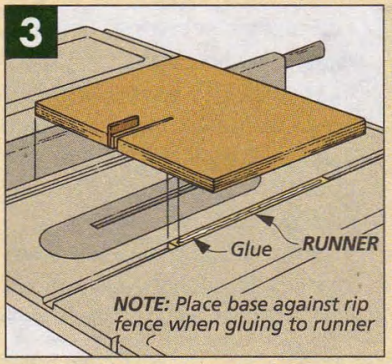

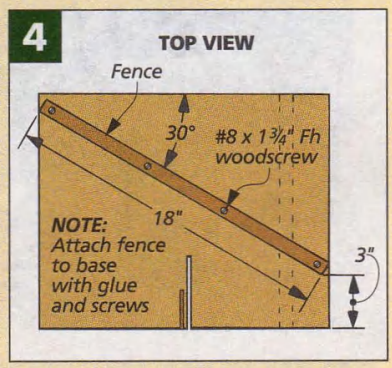

FEATURE YOUR JIG

If you've built an *original* jig and wish to see it featured on this page, send your idea to *Woodsmith*, Reader's Jig, 2200 Grand Avenue, Des Moines, IA 50312.

If we publish it, we'll send you $100 and a full set of *Woodsmith* back issues, with binders. Include a sketch (or photo) of your jig, explain how it's used, and include a daytime phone number.

SOURCES

Woodsmith Project Supplies offers hardware kits and supplies for some of the projects shown in this issue. Supplies for these projects are also available at your local hardware store or through the mail-order sources at right.

COMPUTER DESK

If you're building the computer desk on page 6, you have the option of adding one or more extension wings to the ends of the corner unit. So *Woodsmith Project Supplies* is currently offering two separate hardware kits. One for the main corner desk. And another for each extension wing.

These kits include the knock down fittings, leg levelers, grommets, and full extension drawer slides (for the wing only), plus all the screws and threaded inserts you'll need. (They don't include the keyboard tray hardware, see below.)

7109-100 Computer Desk Hardware $19.95
7109-200 Desk Extension Wing Hardware $24.95

Sliding hardware for keyboard trays (and other computer-related hardware) are available at local computer stores or at the sources listed at right. Prices for the keyboard hardware range from $30 to over $100.

LAMINATE TRIM BIT. To trim the laminate on the desk, I used a special trim bit in my router. It doesn't have a bearing and is only 1/4" in diameter, so I could trim right into the inside corners on the front of the desk. These bits are available from the sources at right.

TOOL CHEST

When selecting the hardware for the tool chest on page 20, I found there was quite a difference between the quality of some of the pieces of hardware.

For instance, there are several flush ring drawer pulls available. The ones I chose are heavy brass with square corners that have slightly tapered edges (which makes them easier to install). And the hinge for the pull is accurately machined and lifts easily.

Also, the heavy-duty handles have a stop built in so the handle won't pinch your fingers against the case.

The hardware for this chest is expensive. But it was the highest quality we could find, and we felt this tool chest deserved it. In fact, we even included a 1" x 2" brass name plate you can have engraved.

7109-300 Tool Chest Hardware $99.95

Note: This or similar hardware is available from the sources at right, though you may need to find the brass chain locally.

LOCK. The lock we used on the tool chest features a steel pin that helps keep the lid and case aligned. The lock is included in the hardware kit (see above), but you can also order it from the sources at right.

NEW BOOK

Last issue, I mentioned a new book featuring bookcase and shelf plans. Now, the second book in "The Woodsmith Collection" is

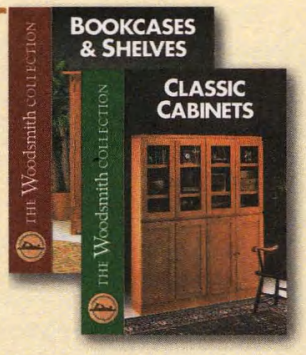

available. *Classic Cabinets* contains ten of the best cabinet projects ever featured in *Woodsmith*. From a small collector's cabinet to corner cabinets and an armoire, there's a project to meet everyone's needs.

In the *Woodsmith* tradition, each project is presented with step-by-step instructions, cutting diagrams, technique sections, and detailed illustrations. (There are over 500 in this 96 page book.)

Classic Cabinets, as well as the first book in the series, *Bookcases and Shelves*, can be ordered at a special introductory price.

2005-200 *Classic Cabinets* Book $17.95
2005-100 *Bookcases & Shelves* Book $17.95

MAIL ORDER SOURCES

Similar project supplies and hardware may be ordered from the following companies:

Lee Valley
800-871-8158
Tool chest hardware, Keyboard tray, Laminate bit

Woodsmith Store
800-835-5084
Tool chest hardware, Computer desk hardware, Laminate bit

Woodworkers' Store
800-279-4441
Tool chest hardware, Keyboard tray, Computer desk hardware, Laminate bit

Woodworker's Supply
800-645-9292
Keyboard tray, Laminate bit, Reverse-cut sabre saw blades

WOODSMITH PROJECT SUPPLIES

To order a hardware kit or books from *Woodsmith Project Supplies* or for a copy of our *WoodsmithShop* catalog, use our Toll Free order line. It's open Monday through Friday, from 7 AM to 7 PM Central Time.

Before calling, please have your VISA, MasterCard, or Discover Card ready.

If you would like to mail your order in, call the number below for more information concerning shipping charges as well as any applicable sales tax.

1-800-444-7527

Note: Prices subject to change after April 1997

WoodNet™ **NOW ON THE WEB!**

- 50 Woodworking Tips Online
- Woodworking Techniques — Step-by-Step
- Project Plans You Can Download
- WoodNet Forum — Woodworkers' Q & A
- Power Tool Reviews
- Links to Other Woodworking Sites
- Coming Soon: Online Back Issue Database

Point your browser to:

http://www.augusthome.com

Select "Woodworking" from the Welcome Page menu.

FINAL DETAILS

◄ ***Computer Desk.*** *This computer desk looks great sitting in the middle of a room. But it's also designed to fit nicely in a corner. Complete plans for the desk begin on page 6.*

▼ ***Pull-out Drawers.*** *Full-extension drawers on each side of the desk provide convenient storage for pens, pencils, and other desk items.*

◄ ***Tool Chest.*** *Specially-designed, heavy brass handles allow you to get a good grip on this frame and panel tool chest. And the handy drawer in the base features unique, flush ring pulls. See page 20 for plans.*

Knife Rack. ► *This rack holds your knives securely in place. And it can be mounted to a wall or used in a drawer. Step-by-step instructions begin on page 30.*